User's Manual

CITIZEN

LINE THERMAL PRINTER

MODEL CBM1000

Japan CBM Corporation

Declaration of Conformity

Manufacturer's Name : Japan CBM Corporation
Manufacturer's Address : CBM Bldg., 5-68-10, Nakano, Nakano-ku
Tokyo, 164-0001, Japan

Declare the Product

Product Name	Line Thermal Printer
Model Number(s)	CBM1000 Series
	(CBM1000RF/PF)
	(S.No.9990001 -)

Conform to the following Standards

LVD	: EN60950	: A11: 1997
EMC	: EN55022	: 1998 Class A
	: EN61000-3-2	: 1995
	: EN61000-3-3	: 1995
	: EN55024	: 1998
	: EN61000-4-2	: 1995 ±4KV CD, ±8 KV AD
	: EN61000-4-3	: 1995 3 V/m, 80 MHz-1000 MHz AM 1 KHz 80 %
	: EN61000-4-4	: 1995 ±1.0 KV(AC Mains), ±0.5 KV(Signal Lines)
	: EN61000-4-5	: 1995 1 KV Normal mode, 2 KV Common mode
	: EN61000-4-6	: 1996 3 V, 0.15 MHz-80 MHz AM 1 KHz 80 %
	: EN61000-4-8	: 1993 50 Hz, 3 A/m(Out of scope)
	: EN61000-4-11	: 1994 10ms/95%, 500ms/30%, 5000ms/100%

Supplementary Information

"The product complies with the requirements of the Low Voltage Directive 73/23/EEC, 93/68/EEC and the EMC Directive 89/336/EEC, 92/31/EEC, 93/68/EEC"

Place Tokyo, Japan

Date August 1999

Signature M. Moriya

Full Name : Mikio Moriya
Position : General Manager
R & D Department

European Contact :
Norco Declaration AB
Box 7146 S-250 07 Helsingborg Sweden

Warning : This is a Class A product. In a domestic environment this product may cause radio interference in which case the user may be required to take adequate measures.
This declaration is applied only for 230 V model.

IMPORTANT SAFETY INSTRUCTIONS

- Read all of these instructions and save them for future reference.
- Follow all warnings and instructions marked on the product.
- Unplug this product from the wall outlet before cleaning. Do not use liquid or aerosol cleaners. Use a damp cloth for cleaning.
- Do not use this product near water.
- Do not place this product on an unstable cart, stand or table. The product may fall, causing serious damage to the product.
- Slots and openings on the back or bottom of the case are provided for ventilation. To ensure reliable operation of the product and to protect it from overheating, do not block or cover these openings. The openings should never be blocked by placing the product on a bed, sofa, rug or other similar surface. This product should never be placed near or over a radiator or heater. This product should not be placed in an built-in installation unless proper ventilation is provided.
- This product should be operated from the type of power source indicated on the marking label. If you are not sure of the type of power available, consult your CBM dealer or local power company.
- Do not allow anything to rest on the power cord. Do not place this product where the cord will be walked on.
- If an extension cord is used with this product, make sure that the total of the ampere ratings of the products plugged into the extension cord does not exceed the extension cord ampere rating. Also, make sure that the total of all products plugged into the wall outlet does not exceed 15 amperes.
- Never push objects of any kind into this product through cabinet slots as they may touch dangerous voltage points or short out parts that could result in a risk of fire or electric shock. Never spill liquid of any kind on the product.
- Except as explained elsewhere in this manual, do not attempt to service this product by yourself. Opening and removing the covers that are marked “Do Not Remove” may expose you to dangerous voltage points or other risks. Refer all servicing on those components to service personnel.
- Unplug this product from the wall outlet and refer servicing to qualified service personnel under the following conditions:
  A. When the power cord or plug is damaged or frayed.
  B. If liquid has been spilled into the product.
  C. If the product has been exposed to rain or water.
  D. If the product does not operate normally when the operating instructions are followed. Adjust only those controls that are covered by the operating instructions since improper adjustment of other controls may result in damage and will often require extensive work by a qualified technician to restore the product to normal operation.
  E. If the product has been dropped or the cabinet has been damaged.
  F. If the product exhibits a distinct change in performance, indicating a need for service.
- Please keep the poly bag which this equipment is packed in away from children or throw it away to prevent children from putting it on. Putting it on may cause suffocation.

WICHTIGE SICHERHEITSANWEISUNGEN

- Lesen Sie die nachfolgenden Anweisungen sorgfältig durch und bewahren Sie sie auf.
- Befolgen Sie alle auf dem Drucker vermerkten Hinweise und Anweisungen. Vor dem Reinigen grundsätzlich Stecker aus der Steckdose ziehen. Keine Flüssigkeiten oder Aerosolreiniger benutzen. Nut mit einem feuchten Tuch abwischen.
- Der Drucker darf nicht in der Nähe von Wasser aufgestellt werden.
- Drucker nicht auf einem unstabilen Wagen, Stand oder Tisch aufstellen. Der Drucker könnte herunterfallen und dabel beschädigt werden.
- Schlitze und Öffnungen im Gehäuse, in der Rückwand und im Boden dienen der Belüftung. Sie dürfen keinesfalls zugedeckt oder blockiert werden, da sich der Drucker sonst überhitzt. Drucker nicht auf ein Bett, Sofa, Teppich oder dergleichen stellen. Drucker nicht in der Nähe eines Heizkörpers aufstellen. Drucker darf nicht eingebaut werden, falls nicht für ausreichende Belüftung gesorgt ist.
- Drucker nur mit der auf dem Typschild angegebenen Spannung betreiben. Wenn Sie sich nicht sicher sind, fragen Sie ihren Händler oder ihr zuständiges Elektrizitätswerk.
- Nichts auf das Stromanschlußkabel stellen. Kabel muß so verlegt werden, daß man nicht darauftreten kann.
- Ein etwaiges Verlängerungskabel muß der Stromstärke aller daran angeschlossenen Geräte entsprechen.
- Keine Gegenstände in die Gehäuseschlitze schieben.
- Drucker darf nur da gewartet werden, wo im Handbuch angegeben, Öffnen und. Abnehmen von Abdeckungen, die mit “Do not remove” gekennzeichenet sind, könnte gefährliche spannungführende Stellen oder sonstige Gefahrenpunkte freilegen. Die Wartung solcher Stellen darf grundsätzlich nur von besonders ausgebildetem Fachpersonal vorgenommen werden.
  A. Wenn das Stromanschlußkabel oder der Stecker beschädigt oder durch-gescheuert ist.
  B. Wenn Flüssigkeit auf dem Drucker verschüttet wurde.
  C. Wenn der Drucker im Regen gestanden hat oder Wasser darauf verschüttet wurde.
  D. Wenn der Drucker trotz genauer Befolgung der Betriebsvorschriften nicht richtig arbeitet. Nur die in der Bedienungsanleitung angegebenen Einstellungen vornehmen. Ein Verstellen anderer Bedienungselemente könnte den Drucker beschädigen und macht umständliche Arbeiten eines qualifizierten Technikers erforderlich, um den Drucker Wieder auf den normalen Betrieb einzustellen.
  E. Wenn der Drucker heruntergefallen ist oder das Gehäuse beschädigt wurde.
  F. Wenn der Drucker in seiner Leistung nachläßt.
- Bitte halten Sie den Kunststoffbeutel, in den die Ware verpackt ist, von Kindern entfernt, oder werfen Sie ihn weg, damit er nicht in die Hande von Kindern gerät. Das Überstülpen des Beutels kann zum Ersticken führen.

Lärmemission kleiner 70dBA

IMPORTANT: This equipment generates, uses, and can radiate radio frequency energy and if not installed and used in accordance with the instruction manual, may cause interference to radio communications. It has been tested and found to comply with the limits for a Class A computing device pursuant to Subpart J of Part 15 of FCC Rules, which are designed to provide reasonable protection against such interference when operated in a commercial environment. Operation of this equipment in a residential area is likely to cause interference, in which case the user at his own expense will be required to take whatever measures may be necessary to correct the interference.

CAUTION: Use shielded cable for this equipment.

Sicherheitshinweis

Die Steckdose zum Anschluß dieses Druckers muß nahe dem Grät angebracht und leicht zugänglich sein.

For Uses in Canada
This digital apparatus does not exceed the class A limits for radio noise emissions from digital apparatus, as set out in the radio interference regulations of the Canadian department of communications.

Pour L'utilisateurs Canadiens
Cet appareil numérique ne dépasse pas les limites de carégorie a pour les émissions de bruit radio émanant d'appareils numériques, tel que prévu dans les réglements sur l'interférence radio du départment Canadien des communications.

GENERAL PRECAUTIONS

- Prior to using the CBM1000 Printer, be sure to read this User's Manual thoroughly. Please keep it handy so that you can refer to it whenever necessary.
- The information contained herein may be changed without prior notice.
- Reproduction of part or all of the User's Manual without permission is strictly prohibited.
- Never service, disassemble, or repair parts that are not described in the User's Manual.
- Note that CBM shall not be responsible for any damages attributable to incorrect operation/handling or improper operation environments, which are not specified in the User's Manual.
- Operate this printer only in the manners as described in the User's Manual; otherwise, accidents or problems could possibly occur.
- Data are basically temporary; they cannot be stored or saved for a long time or permanently. Please note that CBM shall not be responsible for any damages or lost profits resulting from the loss of data attributable to accidents, repairs, tests, and so on.
- If you have any questions, or notice any clerical errors or omissions regarding the information in the User's Manual, please contact your CBM dealer.
- Please note that CBM shall not be responsible for any results or effects resulting from operation of this Printer even if the information in the User's Manual is properly observed.

SAFETY PRECAUTIONS — WHICH SHOULD BE STRICTLY OBSERVED

In order to help prevent safety hazards to operators or any other persons and damages to property, special warning symbols are used in this User's Manual to indicate important items to be strictly observed.

- The following describes the degrees of hazards and damages that can occur if the CBM1000 Printer is incorrectly operated without observing the instructions indicated by the warning symbols.

WARNING

Negligence of the precautions indicated by this symbol may result in death or serious injuries.

CAUTION

Negligence of the precautions indicated by this symbol may result in injuries or damages to property.

This is a symbol mark used to alert your attention to important items.

This is a symbol mark used to indicate useful information, such as procedures, instruction or the like.

⚠ WARNING

- **Never handle the CBM1000 Printer in the manners descried below; otherwise, it may be damaged, get out of order or overheated, possibly causing smoke, fire or electric shock. If the printer is damaged or breaks down, be sure to turn off the power, disconnect the power plug from the wall outlet, and contact your CBM dealer.**
  - Do not allow the printer to be subjected to any strong impact or shock, such as stamping, hitting, dropping, and the like.
  - Install the printer in a well-ventilated place. Do not use the printer in such a manner that its ventilation slots are blocked.
  - Do not install the printer in a place like a laboratory where chemical reactions are expected, or in a place where saltish gases are present in the atmosphere.
  - Use the printer only on the specified voltage and frequency.
  - Do not connect/ disconnect the power cord or data cable by holding the cable.
  - Do not pull or carry the printer in such a manner that undesirable force is applied to the cables.
  - Do not drop or insert any foreign substances, such as paper clips or pins, into the printer.
  - Do not spill any liquid on or spray any chemical-containing liquid over the printer. If any liquid is spilled on the printer, turn it off, disconnect the power cord from the wall outlet, and contact your CBM dealer.
  - Do not connect the printer to an electrical outlet shared by other devices.
  - Do not disassemble or modify the printer in any manner; otherwise, a fire or electric shock may result.
  - Should water enter the equipment by any chance, unplug it and contact your CBM dealer. Using it in that condition may result in fire or electric shock.
  - Do not damage, break, alter, twist excessively, pull, or bundle the power cord. Avoid placing heavy objects on, or heating the power cord, as this may lead to damages to the power supply which may cause a fire, an electric shock, or a malfunction. Contact your CBM dealer if the power cord is damaged.
  - Do not overload a single electrical outlet by using a table tap or a current tap socket from it. This may result in fire or electric shock.

- The plastic bag the printer came in must be disposed of properly or kept away from children. Wearing it over the head may lead to suffocation.

⚠ PRECAUTIONS FOR INSTALLATION

- Do not use or store the CBM1000 Printer in a place exposed to heat of fire, moisture or direct sunlight, or in a place where the prescribed operating temperature and humidity are not met, or in a place exposed to oily mist, iron powder or dust; otherwise, the printer may get out of order, emit smoke or catch fire.
- Do not install the printer in a place like a laboratory where chemical reactions are expected, or in a place where saltish gases are present in the atmosphere; otherwise, there may occur a danger of fire or electric shock.
- Install the printer on a horizontal, sturdy table in a place provided with proper ventilation and free from any vibration. (Be careful not to block the ventilation slots of the printer.)
- Do not put any object on the printer, or this may cause a trouble.
- Do not use the printer near a radio or television receiver. Avoid sharing an electrical outlet with a radio or television receiver, or this may cause a reception problem.
- Use the printer only on the specified voltage and frequency; otherwise it may emit smoke, catch fire or cause other problems.
- Confirm that the wall outlet used for printer connection has sufficient electrical capacity.
- Avoid sharing a single electrical outlet with other devices; otherwise, the electrical capacity may be exceeded, causing the outlet to overheat or the power supply to be shut down. Also, do not stamp or put any object on the cables.
- Never connect the grounding cable to a gas pipe, or this may lead to a danger of explosion. Before connecting or disconnecting the grounding cable, be sure to disconnect the power plug from the wall outlet.
- Be sure to turn off the power of the printer and the host computer connected before connecting or disconnecting the cables; always hold both plug and cable. Do not pull or carry the printer in such a manner that an undesirable load is applied to the cables.
- Connect the connector cables correctly and securely. Especially, if a connection is made with the polarity reversed, internal elements inside the printer may be damaged or the host computer connected may be adversely affected.
- Use shielding wires or twist paired wires for signal lines in order to minimize the effects from noise. Avoid connecting to a device that is likely to generate much noise.
- When a drawer Kick-Out Connector is provided, do not connect it to any other device than solenoids with prescribed specifications, or this could cause trouble.
- Install and use the printer in a place provided with a suitable wall outlet nearby so that you can immediately disconnect the power plug to shut off the power to the printer if an abnormal condition occurs.
- When the equipment will not be used for a long period of time, unplug it.
- When transporting the equipment, remove the paper roll from it.

⚠ PRECAUTIONS FOR HANDLING

Observe the following precautions to use the CBM1000 Printer correctly and avoid troubles from occurring.

- Do not use any other power supply than the specified AC adapter.
- Do not allow the printer to start printing when there is no recording paper installed.
- Be careful not to drop foreign substances, such as paper clips, pins or screws, into the printer.
- Do not spill any liquid on the printer, or spray it with any chemical-containing liquid.
- Do not stamp on, drop, hit, or impart any strong shock to the printer.
- Never use any pointed object such as a pen, to operate the controls on the operation panel.
- Do not use cellophane tape to join the ends of paper to allow continuous printing.
- Never pull the end of the paper installed forcibly with the printer cover left closed.
- When opening/ closing the cover, be careful that the paper does not get caught.

To prevent injuries and associated damages:

- Do not touch the printing part of the print head.
- While the printer is turned on, never touch the moving parts inside, such as the cutter, gears, and electrical parts.
- Be careful to avoid bodily injuries or damaging other objects with edges of sheet metal parts.
- Should any abnormal condition occur while the printer is operating, stop it immediately and disconnect the power plug from the wall outlet.
- When opening/closing the cover, and so on, be careful not to catch your hand or finger on the equipment.
- Refer all necessary corrective actions to your CBM dealer (Refer to “9. MAINTENANCE AND SERVICE” on Page 37.) Do not try to disassemble and repair the printer on your own.

In the position indicated below, a label is provided to alert your attention. Read the cautionary information on it, and handle the printer properly.

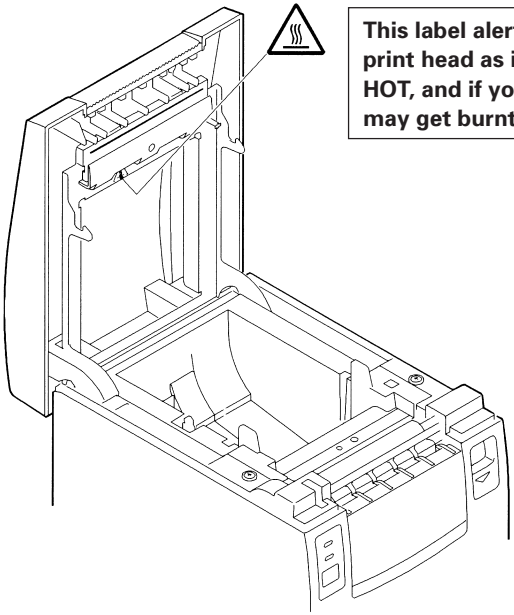

This label alerts you to the print head as it becames HOT, and if you touch it, you may get burnt.

HOT AREA:

Be careful not to touch this area to avoid burns as it becomes HOT.

ⓘ DAILY MAINTENANCE

- Prior to start maintenance work, be sure to turn off the printer.
- When cleaning the platen, use a cotton swab applied with ethyl alcohol and wipe off stains.

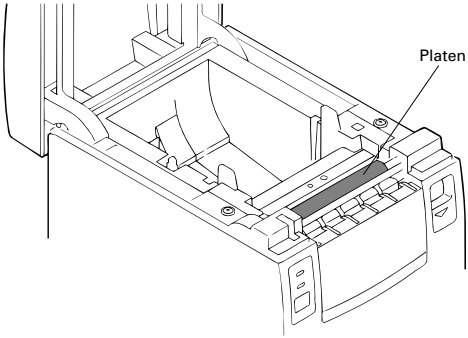

⚠ CAUTION:

Avoid cleaning the print head immediately after printing is finished. The print head is HOT.

- Use a dry soft cloth to wipe off stains and dust from the surfaces of the printer covers.
- When wiping clean heavily stained areas, use a cloth which should be dipped in water and then wrung strongly. Never use organic solvents, such as alcohol, thinner, trichlene, benzene, ketone, or chemical dusters.
- If the printer is contaminated with paper dust, use a soft brush to wipe off.

ⓘ DAILY MAINTENANCE

Cleaning the print head

1 Turn off the power of the printer.
2 Open the printer cover.
3 Using a gauze impregnated with a small amount of alcohol, wipe off stains and dust on the heat-emitting surface of the head.

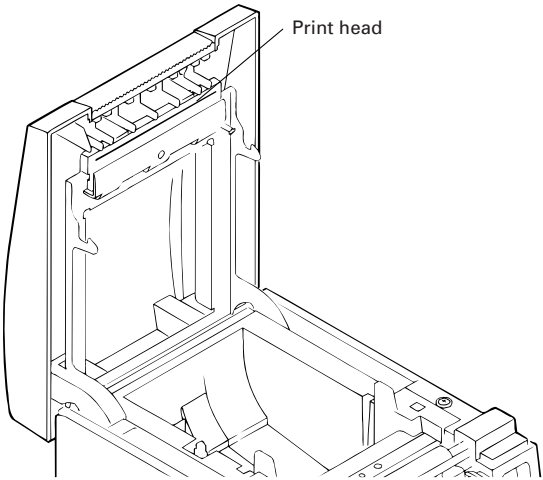

⚠ CAUTION:

Avoid cleaning the print head immediately after printing is finished. The print head is HOT. Do not touch the heat-emitting surface of the head with bare hands or metal objects.

THE TABLE OF CONTENTS

1. GENERAL OUTLINE 1

1.1 Features 1

1.2 Unpacking 2

2. BASIC SPECIFICATIONS 3

2.1 Model Classification 3

2.2 Basic Specifications 4

2.3 Print Paper Specifications 5

2.3.1 Recommended Paper 5

2.3.2 Print Position and Barcode Printing 6

2.3.3 Used Paper Form 7

2.3.4 Sensor Position and Cutter Position 8

3. OUTER APPEARANCE AND COMPONENT PARTS 9

3.1 CBM1000S 9

3.2 CBM1000A / CBM1000D 10

4. OPERATION 11

4.1 Connecting the AC Adapter and AC Power Cord 11

4.2 Connecting Interface Cables 12

4.3 Connecting the Drawer Kick-Out Connector 13

4.4 Setting / Replacing Paper Rolls 14

4.5 Adjusting the Paper Near-end Sensor 16

4.6 Using 58 mm Wide Paper Rolls 17

4.7 Removing Paper Jams 18

4.8 Cleaning the Print Head 18

4.9 Operation Panel and Error Indication 19

4.10 Hexadecimal Dump 22

5. SETTING DIP SWITCHES 23

5.1 Location of DIP Switches 23

5.2 Table for Setting DIP Switches 24

6. PARALLEL INTERFACE 27
6.1 Bidirectional Parallel Interface (IEEE1284) 27
6.1.1 Compatibility Mode (Host → Printer communication : Centronics compliant) 27
6.1.2 Reverse Mode (Printer → Host communication) 27
6.1.3 Connector Pin Configuration 28
6.2 Description of Input and Output Signals 29
6.2.1 Input and Output Signals 29
6.2.2 Electrical Characteristics 30
6.2.3 Timing Chart (Compatibility Mode) 31
6.2.4 Data Reception Control 31
6.2.5 Buffering 31

7. SERIAL INTERFACE 32
7.1 Specifications 32
7.2 Connector Pin Configuration 33
7.3 Description of Input and Output Signals 34
7.3.1 Input and Output Signals 34
7.3.2 Error Detection 35
7.3.3 Data Reception Control 35
7.3.4 Buffering 35
7.3.5 Electrical Characteristics 36

8. DRAWER KICK-OUT CONNECTOR AND POWER CONNECTOR ... 37
8.1 Specifications of Drawer Kick-Out Connector 37
8.1.1 Drawer Kick-Out drive signal 37
8.1.2 Electrical characteristics 37
8.1.3 Connector Pin Configuration 37
8.1.4 Drive Circuit 38
8.2 Specifications of the Power Connector 38

9. MAINTENANCE AND SERVICE 39

10. PRINT CONTROL FUNCTIONS 40
10.1 Command List 40
10.2 Command Details 44
10.2.1 Description of Each Item 44
10.2.2 Command Details 45

11. CHARACTER CODES TABLE 148
11.1 Code page 148
11.1.1 Codepage 00H to 7FH & PC437 (USA, European Standard) 148
11.1.2 Codepage Katakana (Japanese) 148
11.1.3 Codepage PC850 (Multilingual) 149
11.1.4 Codepage PC860 (Portuguese) 149
11.1.5 Codepage PC863 (Canadian-French) 150
11.1.6 Codepage PC865 (Nordic) 150
11.1.7 Codepage PC852 (Eastern Europe) 151
11.1.8 Codepage PC866 (Russian) 151
11.1.9 Codepage PC857 (Turkish) 152
11.1.10 Windows Codepage 152
11.2 International Character Codes Table 153

12. APPENDIX 1. PAGE MODE 154
12.1 Overview 154
12.2 Mapping of print data in the print area 155
12.2.1 Example of the Use of PAGE MODE 157

13. APPENDIX 2. BIDIRECTIONAL PARALLEL INTERFACE 160
13.1 Overview 160
13.1.1 Parallel Interface Communication Modes 160
13.1.2 Interfacing Phases 161
13.2 Negotiation 162
13.2.1 Overview 162
13.2.2 Negotiation Procedure 162
13.2.3 Precautions 163
13.2.4 Data Communication from Printer to Host 164
13.2.4.1 Nibble Mode 164
13.2.4.2 Byte Mode 165
13.2.5 Device ID 166
13.2.6 Termination 166

14. APPENDIX 3. IDENTIFICATION OF SEND STATUS 168

15. APPENDIX 4. OUTLINE DRAWING 169
15.1 CBM1000S 169
15.2 CBM1000A / CBM1000D 170
15.3 AC Adapter (31AD) 171

16. APPENDIX 5. BLOCK DIAGRAM 172

<<<German>>>

INHALT

4. BETRIEB 182
4.1 Anschließen des Netzteils und Netzkabels 182
4.2 Anschließen der Schnittstellenkabel 183
4.3 Anschließen des Drawer Kickout-Steckers 184
4.4 Einlegen / Auswechseln von Papierrollen 186
4.5 Justieren des Papierende-Sensors 188
4.6 Verwenden von 58 mm breiten Papierrollen 189
4.7 Beseitigen von Papierstaus 190
4.8 Reinigen des Druckkopfes 190
4.9 Bedienungsfeld und Fehleranzeige 191
4.10 Hexdump 194

5. EINSTELLEN DER DIP-SCHALTER 195
5.1 Position der DIP-Schalter 195
5.2 DIP-Schaltertabelle 196

6. PARALLELE SCHNITTSTELLE 199
6.1 Bidirektionale parallele Schnittstelle (IEEE1284) 199
6.1.1 Kompatibilitätsmodus (Host → Druckerkommunikation: Centronics-kompatibel) 199
6.1.2 Reverse-Modus (Drucker → Hostkommunikation) 199
6.1.3 Belegung der Anschlußstifte 200
6.2 Beschreibung von Eingangs- und Ausgangssignalen 201
6.2.1 Eingangs- und Ausgangssignale 201
6.2.2 Elektrische Kenndaten 202
6.2.3 Timing-Tabelle (KompatibilitätsModus) 203
6.2.4 Datenempfangssteuerung 203
6.2.5 Datenpufferspeicher 203

7. SERIELLE SCHNITTSTELLE 204
7.1 Technische Daten 204
7.2 Belegung der Anschlußstifte 205
7.3 Beschreibung der Eingangs- und Ausgangssignale 206
7.3.1 Eingangs- und Ausgangssignale 206
7.3.2 Fehlererkennung 207
7.3.3 Datenempfangssteuerung 207
7.3.4 Pufferung 207
7.3.5 Elektrische Kenndaten 208

8. DRAWER KICKOUT- ANSCHLUSS UND STROMANSCHLUSS 209
8.1 Technische Daten des Drawer KickOut-Anschlusses 209
8.1.1 Drawer KickOut-Treibersignal 209
8.1.2 Elektrische Kenndaten 209
8.1.3 Belegung der Anschlußstifte 209
8.1.4 Treiberschaltung 210
8.2 Technische Daten des Stromanschlusses 210

9. WARTUNG UND KUNDENDIENST 211

Note:
CITIZEN,CITIZEN logo are registered trademark of CITIZEN WATCH CO.,LTD.
Windows codepage is a registered trademark of Microsoft Corporation.

1. GENERAL OUTLINE

The CBM1000 is a compact-sized, line thermal printer developed for a variety of applications. It has abundant built-in features, and can be used as a data communication terminal, pos terminal, kitchen terminal and for other applications.

1.1 Features

- Paper drop-in mechanism; when supplying or replacing paper rolls, all you have to do is just drop a paper roll into the printer and close its cover. This will facilitate paper handling and head cleaning greatly.
- High speed (100 mm/s), and low-noise thermal printing.
- Front-side paper ejection method, which allows the printer to be installed and used anywhere with few restrictions.
- Hermetic covering structure, which helps prevent any foreign matter or liquid from getting into the printer.
- Built-in input buffer.
- Bar-code Printing (Possible using special commands).
- Page mode, which allows you to lay out pages freely.
- Registration of user-defined characters and logos into flash memory.
- Built-in Drawer Kick-Out interface.
- Auto cutter mechanism provided as a standard unit.
- Selection possible, as required, from two types: Easy-to-handle, built-in power supply type, and lightweight flat AC adapter type.
- Use of 58 mm wide paper rolls possible by using the partition supplied.

1.2 Unpacking

When unpacking the printer, confirm that the following are provided:

- Printer ..... 1 unit
- Partition (For 58 mm wide paper roll) ..... 1 piece
- AC adapter (Provided with the A type only) ..... 1 piece
- AC power cord (Provided with the S type and the A type only) ..... 1 piece
- Sample paper roll (Paper width 80 mm) ..... 1 piece
- User's manual (This book) ..... 1 piece

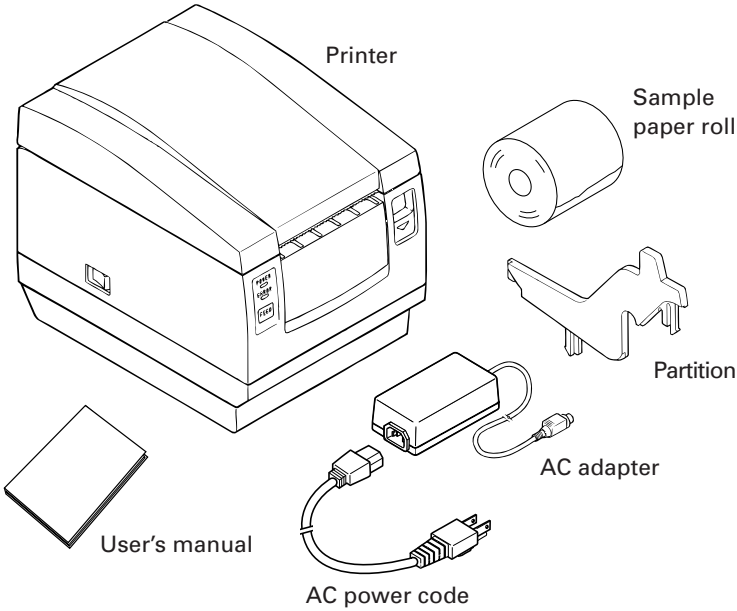

CAUTION:

- **Install the printer on a flat, sturdy table.**
- **Do not install the printer near a heater or in a place exposed to direct sunlight.**
- **Do not use the printer in a high-temperature, high-humidity, or heavily contaminated environment.**
- **Do not use the printer in an environment where condensation may occur. If condensation should occur, leave the power turned off until condensation evaporates completely.**

2. BASIC SPECIFICATIONS

2.1 Model Classification

The printer models are classified by the following designation method:

CBM1000 - R F 120 S - L

Model Name

Label paper function
no display: Nothing
L: Label interval detection/
Black mark detection

Power supply*1
S: Standard type
(Power supply build-in)
A: AC adapter type
D: DC Input type
(Without AC adapter)

Attached power cord spec*2
120: For AC 120 V
230: For AC 230 V
024: For DC 24 V

Character Set
F: International

Interface
R: Serial (RS-232C)
P: Parallel
(IEEE 1284 compliant)

*1 In this user's manual, the type of power supply is signified by one of the following:
Standard type = S type = CBM1000S
AC adapter type = A type = CBM1000A
DC Input type = D type = CBM1000D

*2 Dedicated adapter type and power cord:
31AD-U (AC 120 V 3-wire cord)
31AD-E (AC 230 V Class I cord)

2.2 Basic Specifications

Item \ Model	CBM1000-RF120S/A CBM1000-PF120S/A	CBM1000-RF230S/A CBM1000-PF230S/A	CBM1000-RF024D CBM1000-PF024D
Print method	Line thermal dot print method		
Print width	72 mm/576 dots, (54 mm/432 dots)*1		
Dot density	8 × 8 dots/mm (203 dpi)		
Print speed	100 mm/sec (Fastest, print density level 2), (800 dot lines/sec)		
Number of print columns	Font A: 48/42/36/30 columns (12 × 24) Font B: 64/56/48/40 columns (9 × 24)		
Character size	Font A: 1.25 × 3.00 mm; Font B: 0.88 × 3.00 mm		
Character type	Alphanumeric characters, International characters, Codepages PC437, Katakana, PC850, PC860, PC863, PC865, PC852, PC866, PC857, and Windows codepage		
Logo registration/print	Capable of registering user-defined characters and logos into flash memory.		
NV bit map data area	256K bytes		
Types of bar code	UPC-A/E, JAN (EAN) 13/8 columns, ITF CODE 39, CODE 128, CODABAR, CODE 93		
Line spacing	4.23 mm (1/6 inches); selectable using commands.		
Paper roll	Thermal paper roll: 80 mm (58 mm) × ϕ 83 mm Thermal Label paper roll : 80 mm(58 mm) × ϕ 83 mm (See “2.3 Print Paper Specifications”.)		
Label detection	None, Label interval detection / Black mark detection		
Interfacing	Serial (RS-232C), Parallel (IEEE1284 compliant, Bi-directional communication)		
Input buffer	4K bytes (72 bytes selectable with a DIP switch)		
Supply voltage	S type: AC 120/230 V ±10%; A type/D type: DC 24 V ±7%		
Power consumption	100 W (Max)		
AC adapter spec.	Rated input: AC 120 to 240 V, 50/60 Hz, 120 VA Rated output: DC 24 V, 1.9 A		—
Type	31AD-U	31AD-E	—
Weight	S type: Approx. 2.0 kg; A type/D type: Approx. 1.4 kg		
Outside dimensions	S type: 145 (W) × 190 (D) × 157 (H) mm A type/D type: 145 (W) × 190 (D) × 114 (H) mm		
Operating temperature and humidity	5 to 40°C; 35 to 85% RH (No condensation)		
Storage temperature and humidity	–20 to 60°C; 10 to 90% RH (No condensation)		
Reliability	Print head life: Pulse resistance 1×10^8 pulses (Print ratio 12.5%) Wear resistance 100 Km (At normal temperature/humidity with recommended paper used) Auto cutter life: 500,000 times of cutting (At normal temperature/humidity with recommended paper used)		
Safety Standard*2	UL, C-UL, FCC Class A	TUV, GS, CE marking	UL, C-UL, FCC Class A TUV, GS, CE marking

*1 Represents the value when a 58 mm wide paper roll is used (User selectable).

*2 Represents the safety standards acquired when CBM-made adapters (31AD series) are used.

2.3 Print Paper Specifications

2.3.1 Recommended Paper

(1) Thermal Paper roll

- Type: Heat sensitive paper
- Paper width: 80 + 0/– 1 mm; 58 + 0/– 1 mm
- Paper thickness: 65 ± 5 µm
- Roll diameter: ϕ83 mm or less
- Print side: Outer side of the roll (Top surface)
- Recommended paper: P220VBB-1/HP220A/F230AA (From Mitsubishi Paper)
  TF50KS-E2D (From Nippon Paper)
  KP50 (From Oji Paper)
  or equivalent types of paper
- Core size: ϕ12 mm (Inside diameter); ϕ18 mm (Outside diameter)

(2) Thermal Lavel paper roll

- Type: Heat sensitive paper (Label paper)
- Paper width: 80 + 0/– 1 mm; 58 + 0/– 1 mm
- Label Paper thickness: 65 – 85 µm
- Postebord thickness: 60 µm or less
- Roll diameter: ϕ83 mm or less
- Print side: Outside of the roll (Top surface)
- Recommended paper: KPT86S/G63BC P22 (OHJI TUCK), 135LAB (RICOH)
  or equivalent type of label paper
- Core size: ϕ25 – ϕ28 mm (Outside diameter)

CAUTION:

- **Use of paper other than the specified papers may cause a difference in print density from the CBM specifications. In that case, you can select an appropriate print density with a DIP switch. (See “5. SETTING DIP SWITCHES”)**
- **Do not stick the end of paper to the core with adhesive paste.**
- **Avoid allowing the surface of paper to contact with chemicals or oils; otherwise, it may get colored or the printed data on it may become erased.**
- **Avoid scraping on the surface of paper with your nail or a metal object; otherwise, the surface of heat-sensitive paper may get colored.**
- **Heat-sensitive paper starts getting colored at approx. 70°C; so, be careful not to expose the paper to the effects from heat, humidity, or sunlight.**

2.3.2 Print Position and Barcode Printing

Roll paper width 80 mm provided:

Paper width 80 mm applies to printing area 72 mm (576 dots), and both left and right margins each ca. 4 mm.

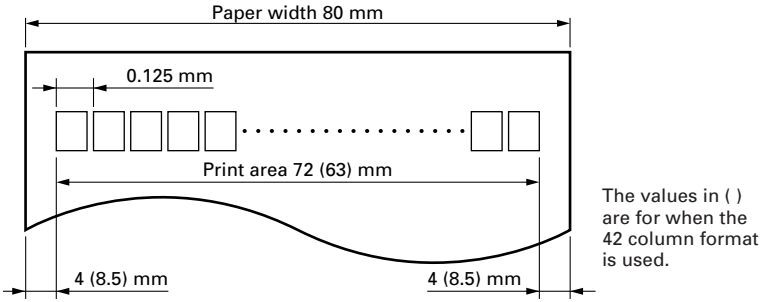

Figure1 Printing Area 1

Roll paper width 58 mm provided:

Paper width 58 mm applies to printing area 54 mm (432 dots), and both left and right margins each ca. 2 mm.

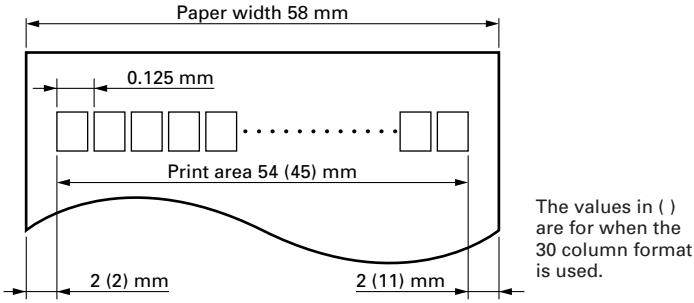

Figure2 Printing Area 2

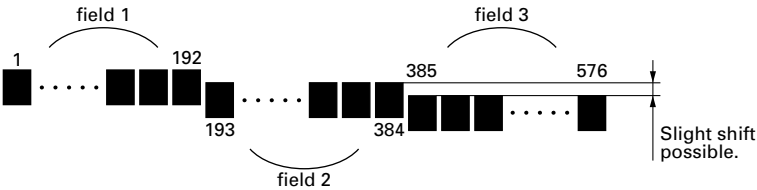

Figure3 misaligned printing

Note: Among the adjacent heating elements side by side, for example, 1-192th dot field becomes possibly misaligned with 193-384th dot one and/or 385-576th dot one as shown in fig. 3 (Print Density Level = 2). Make sure not to spread over the printing area of the ladder Bar code onto the different dots fields, otherwise Bar code Printing become misaligned to affect OCR (Optical Character Recognition) performance.

2.3.3 Used Paper Form

unit=mm

Symbol		Item	Thermal Paper	Thermal Label Paper (Label interval detection)			Thermal Label Paper (Black mark detection)		
				Auto cutter	Tear Bar		Auto cutter	Tear Bar	
	A	Paper thick	0.06–0.08	—			—		
	B	Label total thick	—	0.14–0.16			0.14–0.16		
	C	Pasteboard thick	—	0.065 or less			0.065 or less		
80mm Width	D1	Paper width	79–80	79–80			79–80		
80mm Width	E1	Max. label width	—	78			78		
80mm Width	F1	Max. print width	72	72			72		
58mm Width	D2	Paper width	57–58	57–58			57–58		
58mm Width	E2	Max. label width	—	56			56		
58mm Width	F2	Max. print width	54	50			50		
	G	Label length	—	25–360			25–360		
	H	label interval length	—	10–30			10–30		
	I	Black mark length	4–8	—			4–8		
	J	Black mark size width	15 or more	—			15 or more		
	K	Black mark position	44	—			44		
	L	Black mark pitch	30–360	—			35–360		

Thermal Paper

Print the black mark in the back side (PCS value: 0.9 or more)

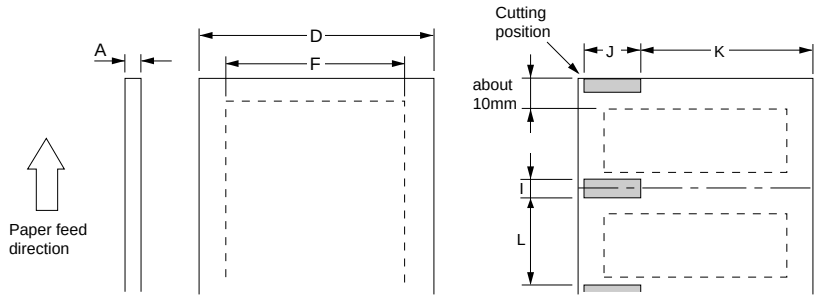

Thermal Label Paper

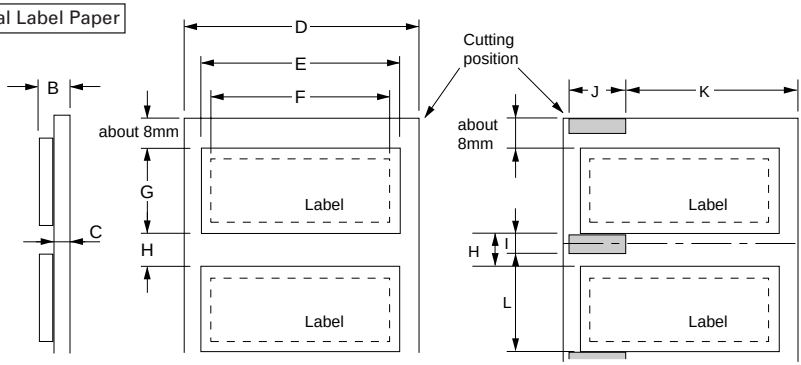

2.3.4 Sensor Position and Cutter Position

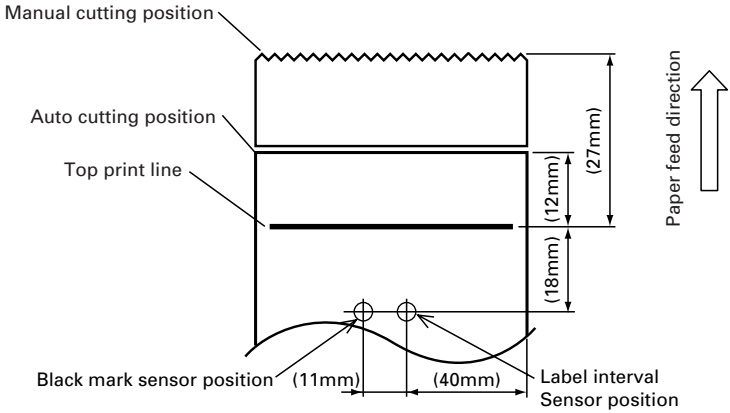

CAUTION:

Observe the following rules on the usage of the auto cutter:
- **Every cut paper should be no less than 10 mm in length.**
- **When cutting a label roll, be sure to cut the base sheet. Never cut labels (tags).**

CAUTION:

When using label sheet:
- **Be sure to cut the base sheet at every label gap. Otherwise, the cutter performance will be immensely degraded.**
- **Never open the printer cover while printing as proper print operation may not be guaranteed. Opening the printer cover may alter label length setting or other parameters.**
- **Never use label rolls with different label sizes or label gaps as proper print operation will not be guaranteed.**

CAUTION:

- **With a label roll using black marking, the printer could print in label gaps. The user should take the necessary corrective action to avoid this.**
- **If black marking is used for label sensing, the printer can print over cut lines. This requires the appropriate user adjustment, however.**

3. OUTER APPEARANCE AND COMPONENT PARTS

3.1 CBM1000S

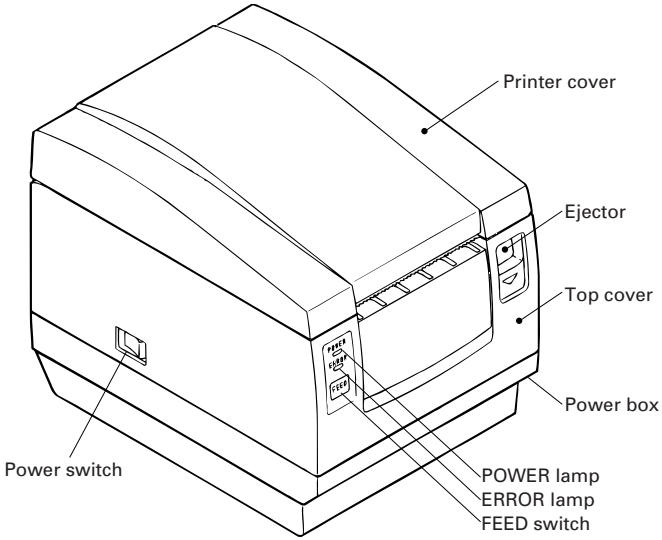

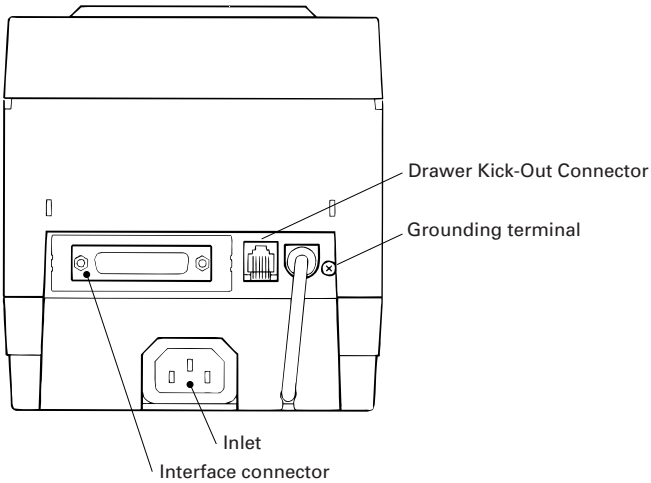

3.2 CBM1000A / CBM1000D

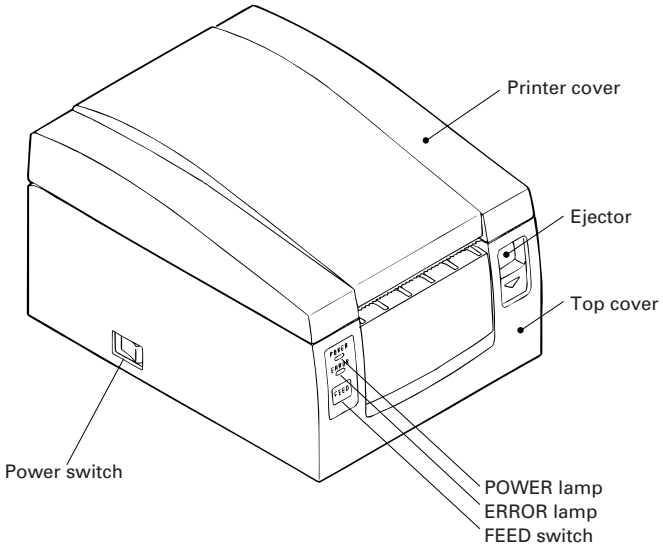

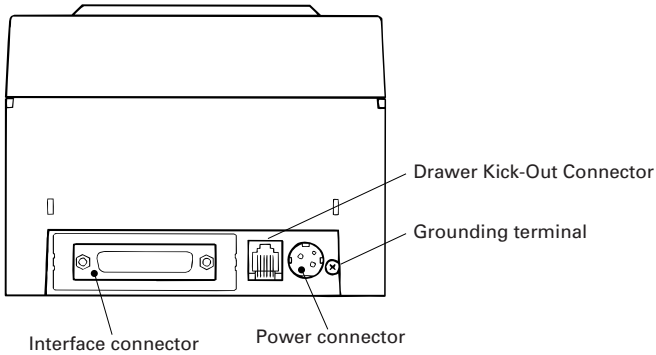

4. OPERATION

4.1 Connecting the AC Adapter and AC Power Cord

1 **Turn off the power of the printer.**

2 **For the AC adapter type only: With the flat side of the AC adapter's cable connector facing upward, insert the cable connector into the power connector on the back side of the printer.**

3 **For the DC Input type only: Use a cable connector which matches the power connector and can input DC 24 V/1.9 A to the print.**

4 **Connect the AC power cord to the inlet of the printer or the AC adapter, and insert the AC power-cord plug into a suitable wall outlet.**

CBM1000S (Standard type)

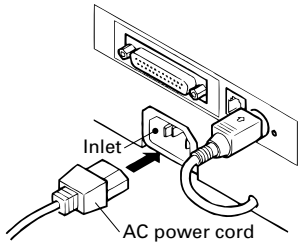

CBM1000A (AC adapter type)

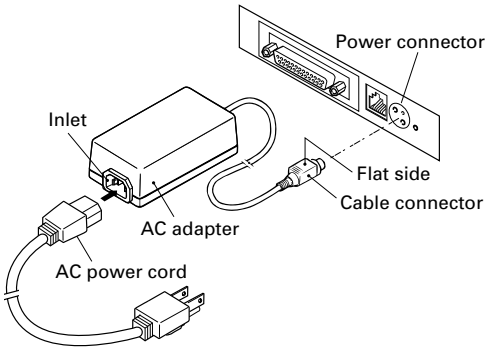

CBM1000D (DC Input type)

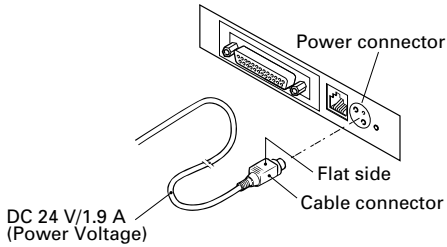

Power connector:	TCS7960-53-2010 (Hosiden) or equivalent
Applicable connector:	TCP8927-63-1100 (Hosiden) or equivalent
	TCP8927-53-1100 (Hosiden) or equivalent

⚠ CAUTION:

- **Do not use any AC adapter other than specified.**
- **When connecting or disconnecting the cable connector of the AC adapter, always pull on the connector, not on the cable.**
- **The AC power cord should be connected to a wall outlet separated from others used by other equipment which tend to emit noise.**
- **Avoid pulling on the power cord, or the cord may be damaged or broken, causing a fire, electric shock.**
- **When the thunder rumbles nearby, disconnect the AC power cord from the wall outlet; otherwise, a thunderbolt may cause a fire or electric shock.**
- **Avoid placing the power cord near a heating device; otherwise, the cover of the cord may melt, causing a fire or electric shock.**
- **When you are not going to use the printer for a long period of time, disconnect the AC power cord from the wall outlet for safety.**

4.2 Connecting Interface Cables

1 **Turn off the power of the printer. (As well as the host computer connected)**

2 **Orienting the interface cable terminal correctly, insert it into the interface connector.**

3 **Secure the cable terminal as shown below.**
Serial interface cable: Fasten the connector with screws.
Parallel interface cable: Hold the connector with clamps.

4 **Connect the other end of the interface cable to the host computer.**

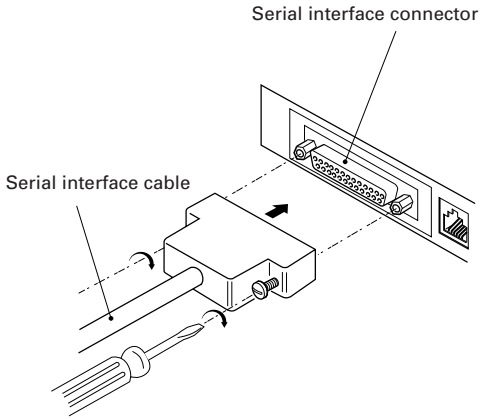

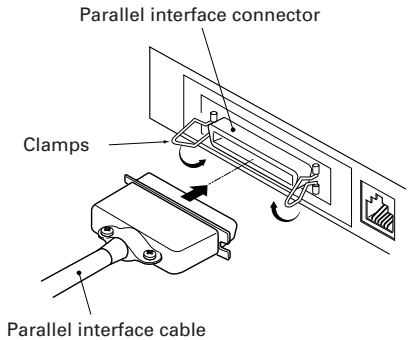

4.3 Connecting the Drawer Kick-Out Connector

1 **Turn off the power of the printer.**

2 **Orienting the Drawer Kick-Out Cable Connector correctly, insert it into the Drawer Kick-Out Connector on the back of the printer.**

3 **Fasten the ground wire to the ground connector on the printer with a screw.**

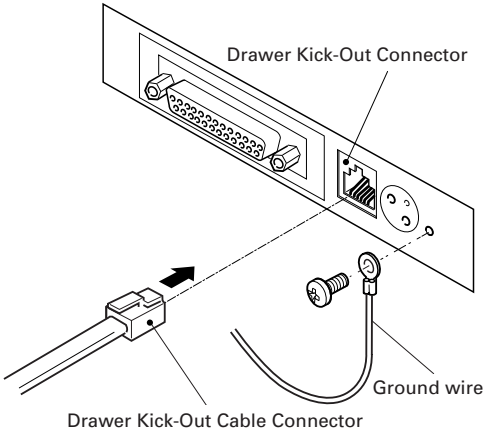

⚠ CAUTION:

- **Do not connect any other device than the specified drawer (Solenoid) to the Drawer Kick-Out Connector.**
  (Do not connect a telephone line either.)

4.4 Setting / Replacing Paper Rolls

1 **Turn on the printer.**

2 **Push the ejector in the direction shown to unlock the printer cover.**

3 **Placing your hands on both sides of the printer cover, open it until it comes to a stop.**

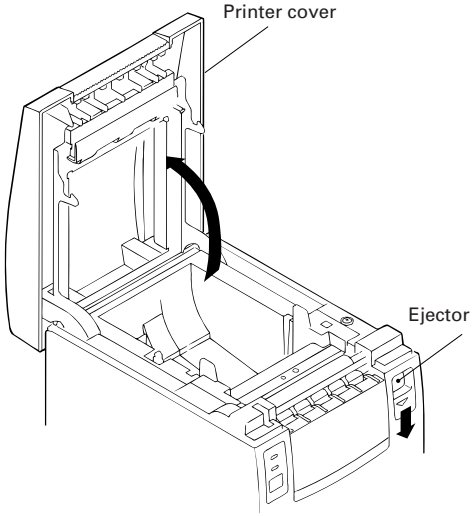

4 **Check the winding direction of the paper roll, and then place it into the paper roll holder correctly.**

5 **With the end of the paper approx. 5 cm out of the case of the printer, close the printer cover. Push lightly on the printer cover until a "click" is heard.**

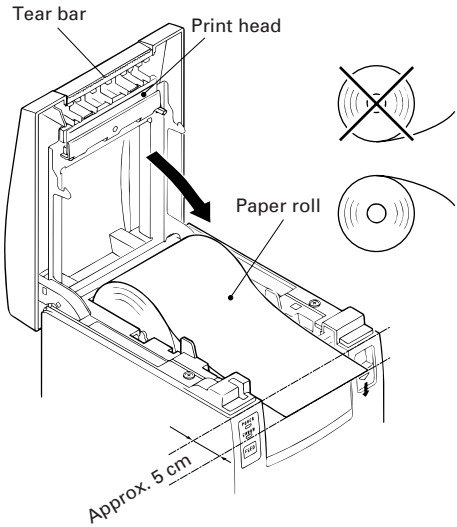

6 Remove an excess length of paper with the tear bar. (Manual cutter)

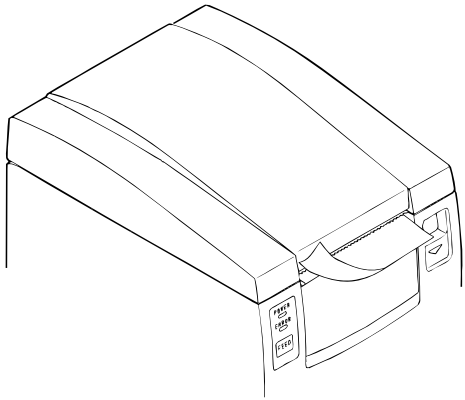

⚠ CAUTION:

- **Always use the specified types of paper roll.**
- **Use of other types of paper roll may not be able to guarantee the specified print quality or service life of the printer.**
- **When opening the printer cover, do not apply an excess force to it beyond its stop position.**
- **The print head has become hot immediately after printing. Do not touch it with your hand.**
- **During printing, do not open the printer cover.**
- **During printing, do not hold the end of the paper printed and ejected, or paper jam may occur.**

4.5 Adjusting the Paper Near-end Sensor

1 **Open the printer cover.**

2 **Push the sensor knob in the direction of arrow 1 to disengage its claw (Or unlock the sensor unit), and then adjust the sensor unit to a desired paper remaining position within the range shown by arrow 2.**

3 **The following table shows the relationship between adjustment positions and levels of paper roll remaining. (A rough guide)**

Adjustment position	Level of paper remaining (Paper roll outside dia. mm)
1	ϕ18
2	ϕ21
3	ϕ24
4	ϕ27

* When specified paper rolls are used.

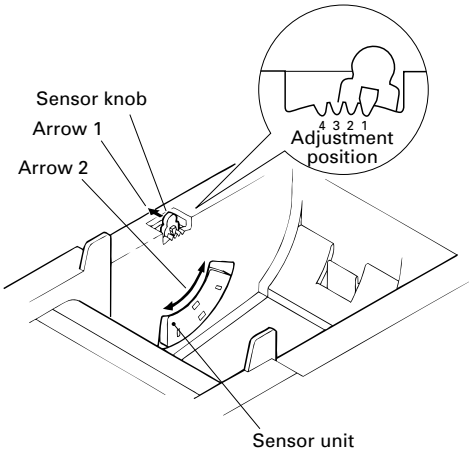

* The paper near end sensor is invalid when using the label paper.

CAUTION:

Use the level of paper remaining (Paper-roll outside diameter) just as a guide as it varies depending on the particular printer and paper rolls used.

4.6 Using 58 mm Wide Paper Rolls

1 **Turn off the power of the printer.**

2 **Open the printer cover.**

3 **Take off 2 screws and remove printer cover.**

4 **Take off damper retention screws, reposition damper (11 mm) in the direction of the bold arrow, then secure it with the original screws again.**

5 **Replace printer cover on printer.**

6 **Install the supplied partition into the position as illustrated.**

7 **Change DIP switch setting for 58-mm roll paper, by referring to "5. SETTING DIP SWITCHES".**

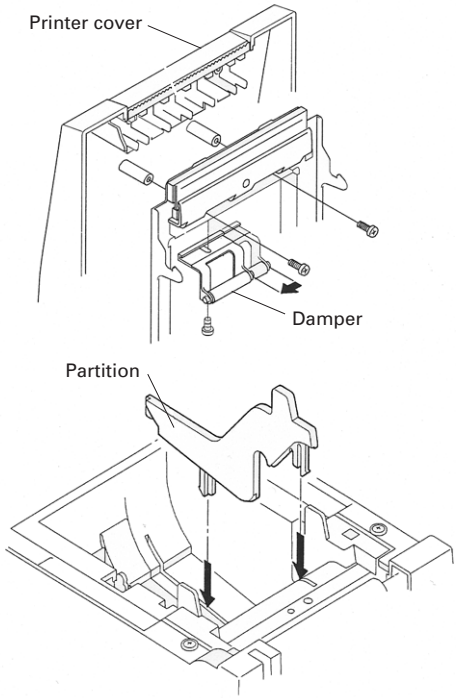

⚠ CAUTION:

Do not change DIP switch setting from 58-mm into 80-mm roll paper in the middle of printing.

4.7 Removing Paper Jams

1. **Turn off the power of the printer.**
2. **Open the printer cover.**
3. **Remove the paper jam including any paper chips remaining. (Also take out the paper roll from the holder.)**
4. **Close the printer cover.**
5. **Turn on the printer. The auto cutter mechanism is initialized and the alarm is cleared.**

4.8 Cleaning the Print Head

1. **Turn off the power of the printer.**
2. **Open the printer cover.**
3. **Wipe off stains, such as dust and the like, on the heating element of the head using a cotton swab impregnated with ethyl alcohol.**

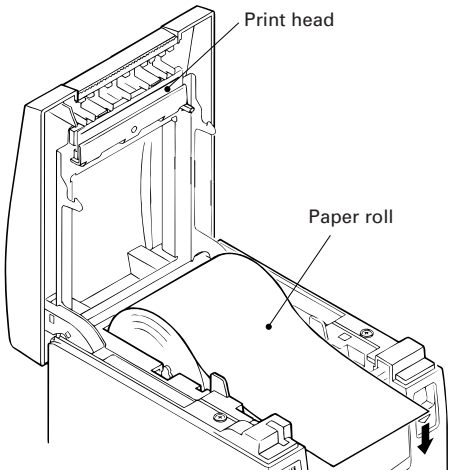

CAUTION:

The print head has become hot immediately after printing. Avoid touching it with your hand. Do not touch the heating element of the head with a bare hand or metal object either.

4.9 Operation Panel and Error Indication

POWER lamp (Green)

Lights when the power is turned on. It blinks when a memory check error has occurred.

ERROR lamp (Red)

Lights or blinks to show different error states. It also blinks while the printer is waiting for a macro to be executed. (See “10.1 Command List”, and “Executing the macro”.)

Error indication	POWER LED	ERROR LED	Recovery method
Memory check error	(Quick blinking)	Lights	Not recoverable.
Cover open	Lights	Lights	Close the cover.
Head overheat	Lights	(Slow blinking)	Recovers automatically when the temperature returns to normal.
Paper near-end	Lights	Lights	Set a new paper roll.
Paper end	Lights	Lights	Set a new paper roll.
Cutter motor lock	Lights	(Quick & Slow blinking)	Remove paper jams.
Macro execution wait	Lights	(Blinking)	Press the FEED switch.
Low voltage error	Lights	Lights	Not recoverable.
High voltage error	Lights	(Quick & Slow blinking)	Not recoverable.
Waiting for label cutter action	OFF	(Blinking)	Press the FEED switch.
Label detection error	OFF	(Slow blinking)	Set the specified label roll.

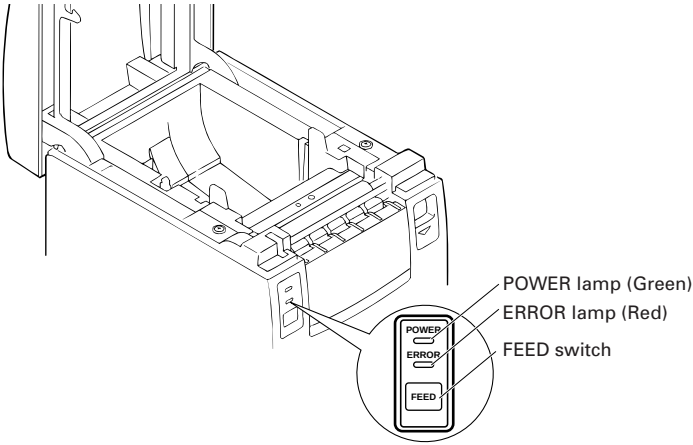

Description of errors

Cover open:	When you open the printer cover, the cover open sensor is activated, causing the ERROR LED to light and the printing operation to stop.
Head overheat:	To protect the print head from being overheated, the head temperature sensor is activated if the head temperature rises over approx. 65°C, causing the ERROR LED to blink and the printing operation to stop. Printing resumes automatically when the head temperature lowers below approx. 60°C.
Paper Near-end:	As the paper roll diameter becomes small, the Paper Near-end Sensor is activated and causes the ERROR LED to light, indicating the paper supply has become low. (See “Selecting the Paper Near-end Sensor valid for a paper end signal output” and “Selecting the Paper Near-end Sensor valid for print stop” described in “10. PRINT CONTROL FUNCTIONS”.)
Paper end:	When the paper roll has run out, the Paper end-Sensor located near the print head on the paper path detects the end of the paper roll, causing the ERROR LED to light and printing to stop. (See “Selecting the Paper Near-end Sensor valid for a paper end signal output” and “Selecting the Paper Near-end Sensor valid for print stop” described in “10. PRINT CONTROL FUNCTIONS”.)
Cutter motor lock:	While the cutter motor is running, if the cutter position detecting sensor inside the cutter unit remains ON or OFF for approx. 1 second or more, the printer determines that the motor has locked, causing the cutter operation and printing to stop. (See “4.7 Removing Paper Jams”.)
Low voltage error:	Occurs when the voltage supplied to the printer decreases ; if this has occurred, turn the power off immediately.
High voltage error:	Occurs when the voltage supplied to the printer increases ; if this has occurred, turn the power off immediately.

Waiting for label cutter action:

Wait until the label discharged by the GS+FF (Cut Label & Discharge) command is cut by the manual cutter and the FEED switch is pressed.

Label detection error:

Label gaps or black marks could not be detected, or the label sheets used do not fall in the specified length limits.
If a label detection error occurs even though the label sheets used fall in the specified length limits, it is most likely that the sensor or its peripheral electronics is defective. The printer becomes Busy.

FEED switch

- Pressing this switch briefly causes one line of paper feeding. Holding down the switch causes continuous paper feeding.
- While a macro is waiting to be executed, pressing the switch causes the macro to be executed.

FEED switch and POWER switch

If you press the POWER switch while holding down the FEED switch, self printing is performed.

Buzzer-on Timing

If either of the following printer errors occurred, the buzzer sounds and the ERROR LED comes on:

1. Paper-End (PE) or Cover Open
   Four short "pip" tones sound in 2 cycles at a 0.5-sec. interval.
2. Auto Cutter Error
   A continuous "pip" tone and "peep" tone sounds for 1 sec.

4.10 Hexadecimal Dump

Hexadecimal dump function allows data sent from the host computer to be printed in hexadecimal numbers as well as in characters corresponding to the numbers.

Starting hexadecimal dump

1 **Open the top cover.**

2 **While pressing the FEED switch, turn on the power of the printer "①".**

3 **When you close the cover "②", a message "Hexadecimal Dump" is printed on paper, and then the data received afterward is printed in hexadecimal numbers and the corresponding characters.**

- **If a character is not available corresponding to the data received, " . " is printed instead.**
- **During hexadecimal dump, no other functions than DLE EOT and DLE ENQ work.**
- **If the data received is not enough for a full line, pressing the FEED switch causes the line to be printed.**

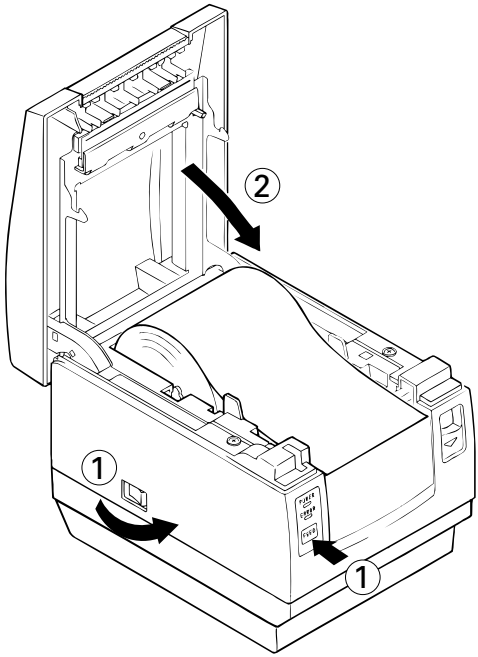

<Example of hexadecimal dump>

=== Hexadecimal Dump ===

```
19 40 08 09 08 09 08 09 08 09   .@........
08 09 30 30 68 20 70 69 20 31   ..00h pi 1
60 68 09 19 21 00 20 21 20 21   `h..!. ! !
20 21 20 21 28 29 28 29 A9 29    ! !()()-)
28 29 30 31 30 31 30 31 30 31   ()01010101
```

Quitting hexadecimal dump

4 **After hexadecimal printing, this function is terminated when you turn off the power or when a reset signal is received from the interface.**

5. SETTING DIP SWITCHES

5.1 Location of DIP Switches

To access the DIP switches, follow these steps:

1 **Turn off the power of the printer.**

2 **Open the printer cover.**

3 **Remove the paper roll.**

4 **While pulling the tab of the DIP switch cover (To unlock it), lift out the cover.**

5 **To change settings refer to the following pages.**

6 **After completing the setting changes turn on power source. The new settings are now enabled.**

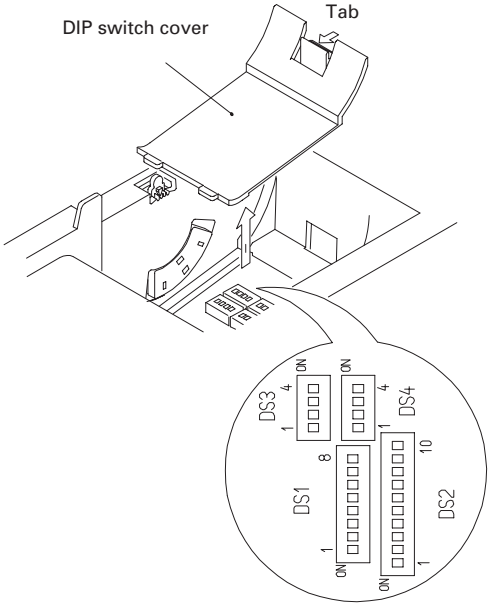

5.2 Table for Setting DIP Switches

DIP switch 1

No.	Function	ON	OFF	Factory setting
1	Auto cutter	Available	Not available	ON
2	unused	—	—	OFF
3	Paper width	58 mm	80 mm	OFF
4	Print columns *	42(80 mm) columns 30(58 mm) columns	48(80 mm) columns 36(58 mm) columns	OFF
5	CR mode	LF Operation	Ignored	OFF
6	Input buffer	72 bytes	4K bytes	OFF
7	Print density (See the table below.)			ON
8				OFF

* : It will be different according to the setting of paper width (DS1 – 3) and font A or B.

Print density (DIP switch 1)

Print density / No.	Level 1 (Light)	Level 2 (Standard)	Level 3 (Slightly dark)	Level 4 (Dark)
7	OFF	ON	OFF	ON
8	OFF	OFF	ON	ON

Note: If print density is set to level 2 or over, print speed may decrease.

DIP switch 2

No.	Function	ON	OFF	Factory setting
1	Character code	See the table below.		OFF *
2	Character code			OFF *
3	Character code			OFF *
4	Character code			OFF *
5	JIS/Shift JIS	Shift JIS	JIS	OFF
6	Condition for BUSY to occur	Reception buffer full	• Off-line • Reception buffer full	OFF
7	Used Paper	Thermal Label Paper	Thermal paper	OFF
8	Detection	Black mark	Label Interval	OFF
9	Label length Set	Command	Auto	OFF
10	Unused	——	——	OFF

* : Depends on destinations.

Selection of Character Code tables (DIP switch 2)

Code page \ No.	1	2	3	4
Codepage PC437 (USA, European Standard)	OFF	OFF	OFF	OFF
Codepage Katakana (Japanese)	ON	OFF	OFF	OFF
Codepage PC850 (Multilingual)	OFF	ON	OFF	OFF
Codepage PC860 (Portuguese)	ON	ON	OFF	OFF
Codepage PC863 (Canadian-French)	OFF	OFF	ON	OFF
Codepage PC865 (Nordic)	ON	OFF	ON	OFF
Codepage PC852 (Eastern Europe)	OFF	ON	ON	OFF
Codepage PC866 (Russian)	ON	ON	ON	OFF
Codepage PC857 (Turkish)	OFF	OFF	OFF	ON
Windows Codepage	ON	OFF	OFF	ON
Not defined	—	—	—	—
•	—	—	—	—
Blank page	ON	ON	ON	ON

“Blank page”is an area for user registration, and is blank (Space) by default.
When “Katakana” is selected, the international character is set for Japanese.

DIP switch 3

No.	Function	ON	OFF	Factory setting
1	Bit length	7 bits	8 bits	OFF
2	Parity	Available	Not available	OFF
3	Odd /Even	Even number	Odd number	OFF
4	Communication mode	XON/XOFF	DTR/DSR	OFF

DIP switch 4

No.	Function	ON	OFF	Factory setting
1	Baud rate	See the table below.		OFF
2	Baud rate			ON
3	DSR	Reset	DSR	OFF
4	INIT	Reset	—	OFF

Baud rate (DIP switch 4)

No. / Baud rate	1	2
2400	OFF	OFF
4800	ON	OFF
9600	OFF	ON
19200	ON	ON

6. PARALLEL INTERFACE

6.1 Bidirectional Parallel Interface (IEEE1284)

6.1.1 Compatibility Mode (Host → Printer communication : Centronics compliant)

• General description
This printer provides Compatibility Mode, which specifies the Centronics interface conventionally used for a wide variety of applications.

• Specifications

Data transfer method:	8-bit parallel
Synchronizing method:	Controlled by nStrobe signal externally supplied
Handshaking:	Handled by nAck and Busy signals
Signal level:	All signals are TTL compatible

6.1.2 Reverse Mode (Printer → Host communication)

Data transfer from the printer to the host computer is conducted in Nibble or Byte Mode. (For details, See “APPENDIX 2. BIDIRECTIONAL PARALLEL INTERFACE”.)

Outline

The reverse mode has been devised to handle data transfer from an asynchronous printer controlled by a host computer.
In Nibble Mode, data is transferred, 4-bits (A nibble) at a time, using traditional control lines. In Byte Mode, data is transferred by making 8-bit data lines bi-directional. Note that either mode cannot work simultaneously with Compatibility Mode, thus resulting in half-duplex transmission. (For details, See “APPENDIX 2. BIDIRECTIONAL PARALLEL INTERFACE”.)

6.1.3 Connector Pin Configuration

Pin	Source	Compatibility Mode	Nibble Mode	Byte Mode
1	Host	nStrobe	HostClk	HostClk
2	Host/Ptr	Data0(LSB)	Data0(LSB)	Data0(LSB)
3	Host/Ptr	Data1	Data1	Data1
4	Host/Ptr	Data2	Data2	Data2
5	Host/Ptr	Data3	Data3	Data3
6	Host/Ptr	Data4	Data4	Data4
7	Host/Ptr	Data5	Data5	Data5
8	Host/Ptr	Data6	Data6	Data6
9	Host/Ptr	Data7(MSD)	Data7(MSD)	Data7(MSD)
10	Printer	nAck	PtrClk	PtrClk
11	Printer	Busy	PtrBusy/Data3.7	PtrBusy
12	Printer	PEerror	AckDataReq/Data2.6	AckDataReq
13	Printer	Select	Xflag/Data1.5	Xflag
14	Host	nAutoFd	HostBusy	HostBusy
15		NC	ND	ND
16		GND	GND	GND
17		FG	FG	FG
18	Printer	+5V	+5V	+5V
19		GND	GND	GND
20		GND	GND	GND
21		GND	GND	GND
22		GND	GND	GND
23		GND	GND	GND
24		GND	GND	GND
25		GND	GND	GND
26		GND	GND	GND
27		GND	GND	GND
28		GND	GND	GND
29		GND	GND	GND
30		GND	GND	GND
31	Host	nInit	nInit	nInit
32	Printer	nFault	nDataAvail/Data0.4	nDataAvail
33		GND	ND	ND
34	Printer	DK_STATUS	ND	ND
35	Printer	+5V	ND	ND
36	Host	nSelectIn	1284-Active	1284-Active

NC: Not Connected
ND: Not Defined

Applicable connectors

Printer side: 57LE-40360 (Amphenol) or equivalent
Cable side: 57-30360 (Amphenol) or equivalent

⚠ CAUTION:

- **The first letter “n” of each signal name indicates that the signal is active “L”.**
- **If any one of the above signals is not available, bidirectional communication cannot be accomplished.**
- **In interfacing signals, be sure to use twist-paired wires for signal lines, and the return side must be connected to signal ground level.**
- **All interfacing conditions are specified based on C-MOS level and must satisfy the following characteristics. Also, specify the rising and falling time of each signal as 0.5 µs.**
- **Avoid transferring data by ignoring nAck or Busy signal; otherwise, the data may be erased.**
- **Make the interface cables as short as necessary.**

6.2 Description of Input and Output Signals

6.2.1 Input and Output Signals

Input signals to the printer

- DATA: An 8-bit parallel signal. (Active “High”)
- nStrobe: A strobe signal to help read 8-bit data. (Active “Low”)
- nInit: A signal to reset the entire printer functions. (Active “Low”)
- nSelectIn: This signal is made “High” when the printer is changed to IEEE 1284 mode.

Output signals from the printer

- nAck: An 8-bit data request signal, which is output at the end of a Busy signal. (Active “Low”)
- Busy: A signal to indicate a busy state of the printer. Input new data when this signal is “Low”. (Active “High”)
- nFault: This signal becomes “Low” when alarmed. At this time, all control circuits in the printer are deactivated. (Active “Low”)
- PEerror: A signal to indicate that the paper supply has become low or has run out completely. (Active “High”)
- DK_STATUS: This signal becomes “High” when the switch is open, and “Low” when it is closed.

Power related signal

- +5 V: A 5 V signal, which is pulled up by a 3.3 KΩ resistor.
- GND: Common ground on circuits.

6.2.2 Electrical Characteristics

Input signal level (nStrobe, DATA 0-7)

All the input signals are at the C-MOS level.
"HIGH" level: 4.0 V minimum
"LOW" level: 0.9 V maximum

Output signal level

All the output signals are at the C-MOS level.
"HIGH" level: 2.4 V minimum
"LOW" level: 0.4 V maximum

Input and output conditions

All the input signals, DATA 0-7, are each pulled up with 50 kΩ resistor, and the other input signals are each pulled up with a 3.3 kΩ resistor.

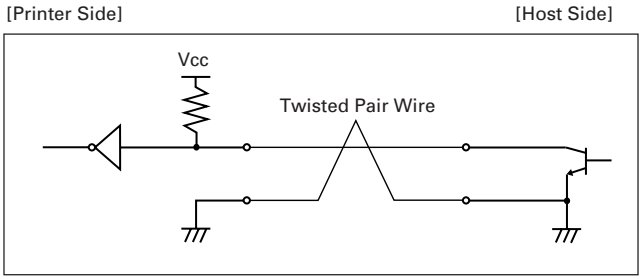

All the output signals, DATA 0-7, are each pulled up with a 50 kΩ resistor, and the other output signals are each pulled up with a 3.3 kΩ resistor.

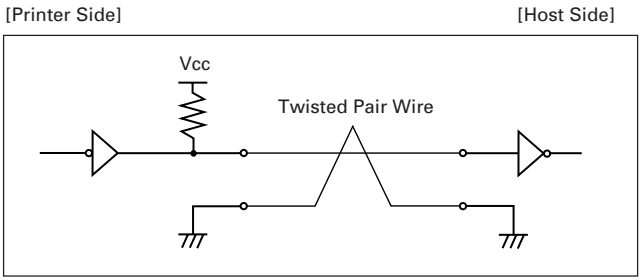

6.2.3 Timing Chart (Compatibility Mode)

Data input and print timing

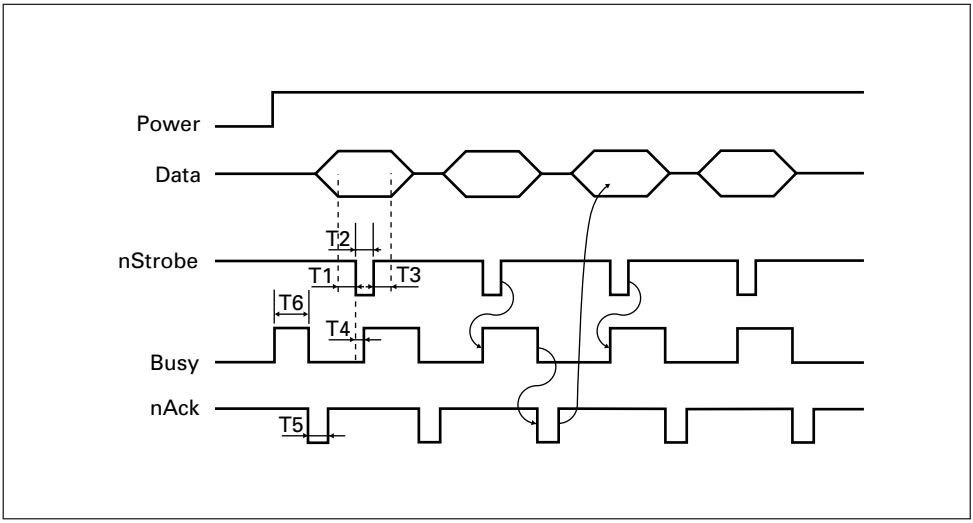

T1, T2, T3:	0.5 μs MIN
T4:	270 ns MAX
T5:	2.3 μs TYP
T6:	500 ms MIN (At power- on)

6.2.4 Data Reception Control

When the Busy signal is at “LOW”, the printer can receive data from the host computer, but when at “HIGH”, data reception is not possible.

6.2.5 Buffering

Since the printer can buffer 4K bytes of data, the host computer is immediately made free.

7. SERIAL INTERFACE

7.1 Specifications

(1) Synchronizing system

Asynchronous

(2) Baud rate

2400, 4800, 9600, or 19200 bps (User selectable)

(3) Configuration of one word

Start bit: 1-bit
Data bits: 7 or 8-bits (User selectable)
Parity bit: Odd, even, or none (User selectable)
Stop bit: 1-bit or more

(4) Signal polarity

RS-232C
• Mark = Logic “1” (–3 V to –12 V)
• Space = Logic “0” (+3 V to +12 V)

(5) Received data (RD signal)

RS-232C
• Mark = 1
• Space = 0

(6) Reception control (DTR signal)

RS-232C
• Mark: Data transfer disabled
• Space: Data transfer enabled

(7) Transmission control (TD signal)

DC1 code (11H)X-ON: Data reception enabled
DC3 code (13H)X-OFF: Data reception disabled

7.2 Connector Pin Configuration

No.	Signal name	Input/output	Function
1	FG	—	Grounding for safety
2	TD	Output	Transferred data
3	RD	Input	Received data
4	RTS	Output	Same as DTR
6	DSR	Input	Data set ready or reset (Selected with a DIP switch)
7	GND	—	Ground for signals
20	DTR	Output	Printer Busy signal
25	INIT	Input	Reset (Selected with a DIP switch)

Applicable connectors (D-Sub connectors)
Printer side: 17LE-13250 (DDK) or equivalent
Cable side: 17JE-23250 (DDK) or equivalent

CAUTION:

- **Signals for RS-232C are specified based on EIA RS-232C.**
- **While data is not being transferred, always maintain the received data in a mark state.**

7.3 Description of Input and Output Signals

7.3.1 Input and Output Signals

(1) RD

This is a serial reception data signal. When a framing error, overrun error or parity error occurs, the data containing the error is printed as a "?".

(2) DTR, RTS

When this signal is Ready, you can write data or commands into the input buffer. If you do so while the signal is Busy, an overrun error occurs, and the previously written data will be ignored. Data can be written into the input buffer even during printing. A Busy signal is also issued at the time of power-on, test printing, on-line communication, and resetting.

(3) TD

As data is received, the remaining capacity of the printer's input buffer decreases. When it becomes less than 128(10) bytes, a DC3 (13H) (Data reception disable signal) is output to the host computer. On the other hand, when the remaining capacity of the input buffer increases to 256(20) or more bytes, a DC1 (11H)(Data reception enable signal) is output to the host computer.

Note: The values in ( ) are for when the 72 bytes of the input buffer is selected by DIP switches.

(4) DSR

During status information transmission, if DTR/DSR control is selected, the host computer transfers data to the printer after checking this signal is a space. If DTR/DSR control is not selected, the host computer ignores this signal and sends data to the printer. Also, this signal can be used as a reset signal after switching a DIP switch. (See "5.2 Table for Setting DIP Switches".) When the pulse width of the signal is 1 ms or longer, a reset will be applied.

(5) INIT

This signal can be used as a reset signal after switching a DIP switch. (See "5.2 Table for Setting DIP Switches".) When the pulse width of the signal is 1 ms or longer in space state, a reset will be applied.

(6) FG

This is a Frame Ground signal.

(7) GND

This is a common ground on circuits.

7.3.2 Error Detection

Detection of parity errors, framing errors, and overrun errors is provided with this printer. When an error is detected, the data containing the error is stored in the buffer as a “?”.

(1) Framing error

If a space state is detected at the timing of stop bit detection, this indicates that an error has occurred. The data containing the error is stored in the buffer as a “?”.

(2) Parity error

With parity check specified, when data is parity-checked and an error is detected, the data containing the error is stored in the buffer as a “?”.

(3) Overrun error

If an overrun error is detected, the data containing the error is stored in the buffer as a “?”.

7.3.3 Data Reception Control

With DTR/DSR control selected, when DTR signal becomes “Low”, the printer can receive data from the host computer, but when it is “High”, the printer cannot receive data. With DTR/DSR control not selected, after sending out X-ON, the printer receives data from the host computer, but cannot receive data from the host computer after X-OFF is sent out.

7.3.4 Buffering

When data is transferred to the input buffer, DTR and TD signals are used as control signals.

- Refer to 7.3.1 (2) for DTR signal.
- Refer to 7.3.1 (3) for TD signal.

7.3.5 Electrical Characteristics

RS-232C circuit

Input (RD, DSR, INIT)

[Printer Side] [Host Side]

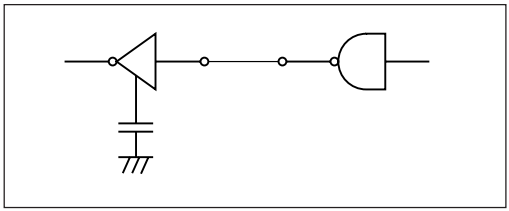

Equivalent to MAX232

Output (DTR, TD, RTS)

[Printer Side] [Host Side]

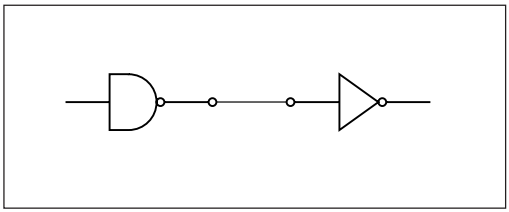

Equivalent to MAX232

8. DRAWER KICK-OUT CONNECTOR AND POWER CONNECTOR

8.1 Specifications of Drawer Kick-Out Connector

8.1.1 Drawer Kick-Out drive signal

A pulse specified by ESC p is output. In parallel interface mode, the SW(+) state can be confirmed at No. 34 pin of the interface connector or by the DLE EOT, GS a and GS r commands at the serial/parallel interface.

8.1.2 Electrical characteristics

- Drive voltage: DC 24 V
- Drive current: 0.8 A maximum (Within 510 ms)
- SW signal: Signal level "L" = 0 to 0.5 V
  "H" = 3 to 5 V

8.1.3 Connector Pin Configuration

No.	Signal	Function
1	FG	Frame Ground
2	DRAWER 1	Drawer 1 drive signal
3	DRSW	Drawer switch input
4	VDR	Drawer drive power supply
5	DRAWER 2	Drawer 2 drive signal
6	GND	Common ground on circuits

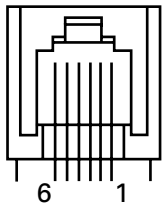

Connector used: TM5RJ3-66 (Hirose) or equivalent
Applicable connector: TM3P-66P (Hirose) or equivalent

CAUTION:

- **No output is produced while printing.**
- **The drawers 1 and 2 cannot be driven simultaneously.**
- **A solenoid used for the drawer should be of 36 Ω or more. The output current should be kept at 0.8 A or less; otherwise, breakdown or burning could occur.**
- **This connector cannot be connected to a telephone line. Do not connect to anything other than the solenoid.**

8.1.4 Drive Circuit

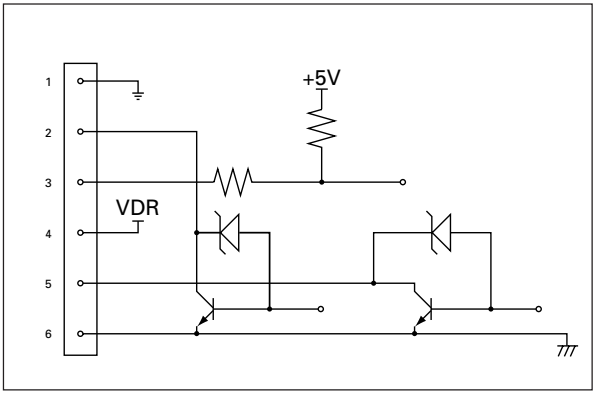

8.2 Specifications of the Power Connector

The following shows the power connector from the dedicated AC adapter.

Pin configuration of Power connector
(Pin number and function)

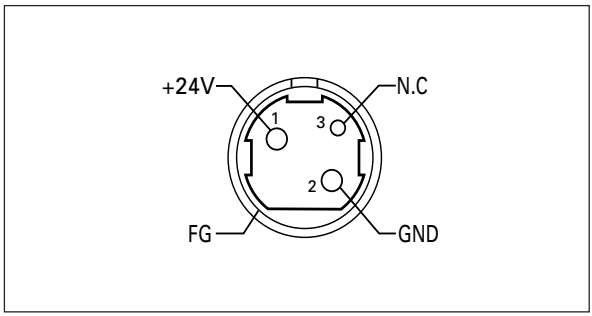

Power connector:	TCS7960-53-2010 (Hosiden) or equivalent
Applicable connector:	TCP8927-63-1100 (Hosiden) or equivalent
	TCP8927-53-1100 (Hosiden) or equivalent

9. MAINTENANCE AND SERVICE

For the information on maintenance and service, please contact your CBM dealer or at the following addresses:

Northern America
CBM America Corporation
Service Center
363 Van Ness Way
Suite 404
Torrance, CA 90501, U.S.A

TEL: +1-310-781-1460
FAX: +1-310-781-9157
E-mail: sales@cbma.com
http://www.cbma.com/

Other Areas
Japan CBM Corporation
Information Systems Division
CBM Bldg, 5-68-10, Nakano
Nakano-ku, Tokyo 164-0001
Japan

TEL: +81-3-5345-7540
FAX: +81-3-5345-7541
E-mail: info-sys@jcbm.co.jp
http://www.jcbm.co.jp/

10. PRINT CONTROL FUNCTIONS

10.1 Command List

No.	Command	Function	Mode	Code	Page
1	HT	Horizontal tab	S.P.	<09>H	45
2	LF	Printing and paper feed	S.P.	<0A>H	46
3	CR	Back to printing	S.P.	<0D>H	47
4	FF	Printing in PAGE MODE and returning to STANDARD MODE	P	<0C>H	48
		Printing and paper feeding to the top of the Label (Black mark position)	S		
5	CAN	Canceling print data in PAGE MODE	P	<18>H	49
6	DLE EOT	Sending status in real-time	S.P.	<10>H<04>H<n>	50
7	DLE ENQ	Real-time request to printer	S.P.	<10>H<05>H<n>	53
8	DLE DC4	Outputting specified pulse in real-time	S.P.	<10>H<14>H<n><m><t>	54
9	ESC FF	Printing data in PAGE MODE	P	<1B>H<0C>H	55
10	ESC RS	Buzzer-on	S.P.	<1B>H<1E>H	55
11	ESC SP	Setting the right spacing of the character	S.P.*	<1B>H<20>H<n>	56
12	ESC !	Collectively specifying the printing mode	S.P.	<1B>H<21>H<n>	58
13	ESC $	Specifying the absolute positions	S.P.*	<1B>H<24>H<n1><n2>	60
14	ESC %	Specifying/Canceling download character set	S.P.	<1B>H<25>H<n>	62
15	ESC &	Defining the download characters	S.P.	<1B>H<26>H<s>H<n><m>[<a><p1><p2> · · <ps×a>] m-n+1	63
16	ESC *	Specifying the bit image mode	S.P.	<1B>H<2A>H<m><n1><n2>[<d>]k	65
17	ESC -	Specifying/Canceling underline	S.P.	<1B>H<2D>H<n>	67
18	ESC 2	Specifying 1/6-inch line feed rate	S.P.	<1B>H<32>H	68
19	ESC 3	Setting line feed rate of minimum pitch	S.P.*	<1B>H<33>H<n>	69
20	ESC =	Data input control	S.P.	<1B>H<3D>H<n>	70
21	ESC ?	Deleting download characters	S.P.	<1B>H<3F>H<n>	71
22	ESC @	Initializing the printer	S.P.	<1B>H<40>H	72
23	ESC D	Setting horizontal tab position	S.P.	<1B>H<44>H [<n>]k<00>	73
24	ESC E	Specifying/Canceling Emphasis Printing	S.P.	<1B>H<45>H<n>	74
25	ESC G	Specifying/Canceling Double strike printing	S.P.	<1B>H<47>H<n>	75
26	ESC J	Printing and feeding paper in minimum pitch	S.P.*	<1B>H<4A>H<n>	76
27	ESC L	Selecting PAGE MODE	S	<1B>H<4C>H	77
28	ESC M	Selection of character fonts	S.P.	<1B>H<4D>H<n>	78
29	ESC R	Selecting the international character set	S.P.	<1B>H<52>H<n>	79
30	ESC S	Selecting STANDARD MODE	P	<1B>H<53>H	80

No.	Command	Function	Mode	Code	Page
31	ESC T	Selecting the character printing direction in PAGE MODE	P	<1B>H<54>H<n>	81
32	ESC V	Specifying/Canceling 90°-right-turned characters	S	<1B>H<56>H<n>	82
33	ESC W	Defining the print area in PAGE MODE	P*	<1B>H<57>H<xL><xH><yL><yH><dxL><dxH><dyL><dyH>	83
34	ESC \	Specifying the relative position	S.P.*	<1B>H<5C>H<nL><nH>	85
35	ESC a	Aligning the characters	S.P.	<1B>H<61>H<n>	86
36	ESC c3	Selecting the Paper Sensor valid for paper end signal output	S.P.	<1B>H<63>H<33>H<n>	87
37	ESC c4	Selecting the Paper Near-end Sensor valid for print stop	S.P.	<1B>H<63>H<34>H<n>	88
38	ESC c5	Enabling/Disabling the panel switches	S.P.	<1B>H<63>H<35>H<n>	89
39	ESC d	Printing and feeding the paper by “n” lines	S.P.	<1B>H<64>H<n>	90
40	ESC p	Generating the specified pulses	S.P.	<1B>H<70>H<m><n1><n2>	91
41	ESC t	Selecting the character code table	S.P.	<1B>H<74>H<n>	92
42	ESC {	Specifying/Canceling the inverted characters	S	<1B>H<7B>H<n>	93
43	GS !	Specifying the character size	S.P.	<1D>H<21>H<n>	94
44	GS $	Specifying the absolute vertical position of characters in PAGE MODE	P*	<1D>H<24>H<nL><nH>	96
45	GS *	Defining the download bit image	S.P.	<1D>H<2A>H<n1><n2>[<d>]n1×n2×8	97
46	GS (A	Execution of test printing	S	<1D>H<28>H<41>H<pL><pH><n><m>	99
47	GS /	Printing the downloaded bit image	S.P.	<1D>H<2F>H<m>	100
48	GS :	Starting/Ending macro definition	S.P.	<1D>H<3A>H	101
49	GS B	Specifying/Canceling the black/white inverted printing	S.P.	<1D>H<42>H<n>	102
50	GS H	Selecting of printing position of HRI characters	S.P.	<1D>H<48>H<n>	103
51	GS I	Sending the printer ID	S.P.	<1D>H<49>H<n>	105
52	GS L	Setting the left margin	S*	<1D>H<4C>H<nL><nH>	106
53	GS P	Specifying the basic calculation pitch	S.P.	<1D>H<50>H<x><y>	108
54	GS V	Cutting the paper	S.P.*	(1)<1D>H<56>H<m> (2)<1D>H<56>H<m><n>	109

No.	Command	Function	Mode	Code	Page
55	GS W	Setting the print area width	S.P.*	<1D>H<57>H<nL><nH>	110
56	GS \	Specifying the relative vertical position of a character in PAGE MODE	S.P.*	<1D>H<5C>H<nL><nH>	112
57	GS ^	Executing the macro	S.P.	<1D>H<5E>H<n1><n2><n3>	113
58	GS a	Enabling/Disabling ASB (Automatic Status Back)	S.P.	<1D>H<61>H<n>	114
59	GS f	Selecting the font of HRI characters	S.P.	<1D>H<66>H<n>	117
60	GS h	Specifying the height of the bar code	S.P.	<1D>H<68>H<n>	118
61	GS k	Printing the bar code	S.P.	(1)<1D>H<6B>H<m> [d1...dk]NUL (2)<1D>H<6B>H<m> <n>[d1...dn]	119
62	GS r	Sending status	S.P.	<1D>H<72>H<n>	127
63	GS v0	Printing of raster bit image	S	<1D>H<76>H<30>H <m><xL><xH> <yL><yH>[<d>]k	129
64	GS w	Specifying the horizontal size (magnification) of bar code	S.P.	<1D>H<77>H<n>	131

Command relative to NV memory

No.	Command	Function	Mode	Code	Page
65	FS g3	Writing data into the download user NV memory	S	<1C>H<67>H<33> <m>H<a1>H<a2>H <a3>H<a4>H<nL>H <nH>H[<d>]nL+ (nH×256)	132
66	FS g4	Reading data from the download user NV memory	S.P.	<1C>H<67>H<34>H <m>H<a1>H<a2>H <a3>H<a4>H<nL>H <nH>H	134
67	FS p	Printing the download NV bit images	S	<1C>H<70>H<n> <m>	136
68	FS q	Defining the download NV bit image	S	<1C>H<71>H<n>H	138

Label Control

No.	Command	Function	Mode	Code	Page
69	GS FF	Printing and discharging the labels	S	<1D>H<0C>H	141
70	GS <	Initialiging the printer mechanism	S.P.	<1D>H<3C>H	142
71	GS A	Correcting the label top position	S.P.	<1D>H<41>H<m><n>	142
72	GS C0	Setting the numbering print mode	S.P.	<1D>H<43>H <30>H<m><n>	143
73	GS C1	Setting the numbering counter mode (A)	S.P.	<1D>H<43>H <31>H<n1><n2> <n3><n4><n5><n6>	144
74	GS C2	Setting the numbering counter	S.P.	<1D>H<43>H <32>H<n1><n2>	145
75	GS C;	Setting the numbering counter mode (B)	S.P.	<1D>H<43>H<3B> H<N1><3B>H<N2> <3B>H<N3><3B> H<N4><3B>H <N5><3B>H	146
76	GS c	Print the counter	S.P.	<1D>H<63>H	147
77	GS l	Setting the label length	S.P.	<1d>H<6C>H <n1L><n1H> <n2L><n2H>	147

In the Mode column: S = STANDARD MODE, P = PAGE MODE
* shows the command affected by GS P.

Commands Nos. 69, 70, 71, and 77 are available only if the "Label" (Black mark) feature is specified.

10.2 Command Details

10.2.1 Descriptions of Each Item

XXXX

[Function]	The name of a command.
[Code]	The string of codes comprising the command is represented by < >H for hexadecimal numbers, < >B for binary numbers, and < > for decimal numbers, [ ] k denotes the number of repetition of “k” times.
[Range]	Indicates the values (setting range) of argumeuts of the command. **Note**: If values outside the defined domain specified with control codes are used, malfunctions could possibly occur, so be sure to use the values within the defined domain.
[Outline]	Describes the functions of the command.
[Caution]	Describes important points and cautionary notes, as required.
[Default]	Initial values for the command if it has arguments.
[Reference]	Describes commands related to the command when it is used.
[Sample Program]	Describes examples of coding on Quick-Basic. ※ Examples are only for reference. They may vary depending on language and version. For details, please refer to a manual in your language.
[Printing Result]	Describes the print results obtained by executing the above programs. However, the print results shown are different in scale from actual print results.

10.2.2 Command Details

HT

[Function] Horizontal tab

[Code] <09>H

[Outline] Shifts the printing position to the next horizontal tab position.

- Ignored when the next horizontal tab position has not been set.

[Caution]

- The horizontal tab position is set by ESC D.
- The initial setting of horizontal tab positions is at intervals of 8 characters for font A at 9th, 17th, 25th, 33rd, columns.

[See Also] ESC D

[Sample Program]

```
LPRINT “0123456789012345678901”;
LPRINT CHR$(&HA);
LPRINT CHR$(&H9) + “AAA”;
LPRINT CHR$(&H9) + “BBB”;
LPRINT CHR$(&HA) ;
LPRINT CHR$(&H1B) + “D”;
LPRINT CHR$(3) + CHR$(7) + CHR$(14) + CHR$(0);
LPRINT CHR$(&H9) + “AAA”;
LPRINT CHR$(&H9) + “BBB”;
LPRINT CHR$(&H9) + “CCC” + CHR$(&HA) ;
END
```

[Printing Result]

```
12345678901234567890
        AAA     BBB  <------  Initially set horizontal tab
AAA  BBB     CCC  <------  When set to the 4th, 8th, and 15th columns
```

LF

[Function] Printing and paper feed

[Code] <0A>H

[Outline] Prints data inside the print buffer and feeds paper based on the line feed amount having been set.

[Caution] The head of the line becomes the next print starting position.

[See Also] ESC 2, ESC 3

[Sample Program]

```
LPRINT “AAA” + CHR$(&HA) ;
LPRINT “BBB” + CHR$(&HA) ;
LPRINT CHR$(&HA) ;
LPRINT “CCC” + CHR$(&HA) ;
END
```

[Print Results]

```
AAA  ←——  Print and line feed
BBB  ←——  Print and line feed
     ←——  Line feed only
CCC  ←——  Print and line feed
```

CR

[Function] Back to printing

[Code] <0D>H

[Outline]

1) When DSW1-5 is OFF:

   This command is ignored.

2) When DSW1-5 is ON:

   With data held inside the internal print buffer, printing and line feed are performed.

   Without data inside the internal print buffer, however, only line feed is performed.

[See Also] LF

[Sample Program]

```
LPRINT “AAA” + CHR$(&HD) ;
LPRINT “BBB” + CHR$(&HD) ;
LPRINT CHR$(&HD) ;
LPRINT “CCC” + CHR$(&HD) ;
END
```

[Print Results]

```
AAA  ←——  Print and line feed
BBB  ←——  Print and line feed
     ←——  Line feed only
CCC  ←——  Print and line feed
```

FF (Page Mode)

[Function] Printing in PAGE MODE and returning to STANDARD MODE

[Code] <0C>H

[Outline] Executes a batch printout of the data mapped in the entire print area, and then returns to STANDARD MODE.

[Caution]
- All mapped data is erased after printout.
- The print area set up by ESC W is initialized.
- This command does not execute a paper cut.
- After this command is executed, the beginning of the line is taken as the start position for the next print.
- This command is only effective when the PAGE MODE is selected.

[See Also] "PAGE MODE" in APPENDIX 1
ESC FF, ESC L, ESC S, GS FF

FF (Standard Mode)

[Function] Printing and paper feeding to the top of the label (Black mark position)

[Code] <0C>H

[Outline] This command prints the data in the printer buffer and searches for the head of the next label (Black mark position)

[Caution] This command is valid only when the label printer is selected with DS2-7. It is ignored when the thermal paper is specified. After sending one label worth of print data, be sure to send this command or GS FF command. After the user intentionally moved the label paper, this command cannnot search for the head of the label properly.

[See Also] GS FF, GS <

[Sample Program]

```
LPRINT "ABC" ; CHR$ (&HA) ;
LPRINT "123" ; CHR$ (&HC) ;
LPRINT "HHHHH" ; CHR$ (&HA) ;
LPRINT "gggg" ; CHR$ (&HC) ;
END
```

[Print Result]

```
ABC
123

HHHHH
g g g g g
```

CAN

[Function]	Canceling print data in PAGE MODE
[Code]	<18>H
[Outline]	Erases all data contained in the currently effective print area in PAGE MODE.
[Caution]	• This command is only effective when PAGE MODE is selected. • If the previously established print area overlaps the currently effective print area, the overlapped data in the previously established area will be erased.
[See Also]	"PAGE MODE" in APPENDIX 1 ESC L, ESC W

DLE EOT n

[Function] Sending status in real-time

[Code] <10>H<04>H<n>

[Range] 1 ≦ n ≦ 4

[Outline] Sends in real-time the status specified by “n”.

n	Status
1	Printer status
2	Status caused by an offline condition
3	Status caused by an error
4	Continuous paper detector status

[Caution]

- Each status represents the current status. It is 1 byte data.
- The status is transferred without checking whether the host is ready to receive or busy.
- This command is executed even if the printer is in offline state, receive-buffer full state, or error state.
- This command is dealt with when it is received.
- If another data string of <10>H<04>H<n> (1 ≦ n ≦ 4) is received, the printer acts the same way as with this command. Therefore, the user should be reminded of this fact.

[Example 1]

Suppose a command “ESC * mnL nH [d1 ... dk]”, where d1 = <10>H, d2 = <04>H, d3 = <01>H.

- The DLE EOT n command cannot be interleaved into the code string of another command consisting of 2 bytes or more.

[Example 2]

If the printer sends DLE EOT 3 after the host has sent up to ESC 3 in its attempt to send ESC 3 n, the printer handles the ESC 3 as ESC 3 <10>H. Thus, the user should be cautious.

- If ASB (Automatic Status Back) is enabled by GS a, it is necessary to discriminate between the status due to ASB and the status due to this command.

(1) Printer status (When n = 1 is specified)

Bit	Status	Hex.	Decimal
0	Unused	00	0
1	Unused	02	2
2	Status of pin 3 of Drawer Kick-Out Connector = L	00	0
	Status of pin 3 of Drawer Kick-Out Connector = H	04	4
3	Online status	00	0
	Offline status	08	8
4	Unused	10	16
5	Undefined	—	—
6	Undefined	—	—
7	Unused	00	0

(2) Status caused by an offline condition (When n = 2 is specified)

Bit	Status	Hex.	Decimal
0	Unused	00	0
1	Unused	02	2
2	Cover closed	00	0
	Cover open	04	4
3	Not in paper feed state triggered by FEED switch	00	0
	In paper feed state triggered by FEED switch	08	8
4	Unused	10	16
5	Printing is not stopped because of “paper out” state	00	0
	Printing is stopped because of “paper out” state	20	32
6	Error not occurred	00	0
	Error occurred	40	64
7	Unused	00	0

Bit 5: Printing is stopped if the paper end detector detects a “paper out” state, or if the printer is out of paper when the Paper Near-end Sensor is enabled by ESC c 4. At this time, bit 5 = “1”.

(3) Status caused by an error (when n = 3 is specified)

Bit	Status	Hex.	Decimal
0	Unused	00	0
1	Unused	02	2
2	No label detection error occurred (only when "Label" is selected).	00	0
	A label detection error occurred (only when "Label" is selected).	04	4
3	Auto cutter error not occurred	00	0
	Auto cutter error occurred	08	8
4	Unused	10	16
5	Unrecoverable error not occurred	00	0
	Unrecoverable error occurred	20	32
6	Auto recovery error not occurred	00	0
	Auto recovery error occurred	40	64
7	Undefined	00	0

Bit 3: If this error occurred because of a paper jam, for example, remove the cause of the error, and then DLE ENQ n (1 ≦ n ≦ 2) can be used to recover from the error. However, it is not possible to recover from any error due to a circuit problem (e.g., broken wire).

Bit 6: If a head overheat error is detected, the printing is stopped until the head temperature falls. At this time, bit 6 = "1".

(4) Continuous paper detector status (When n = 4 is specified)

Bit	Status	Hex.	Decimal
0	Unused	00	0
1	Unused	02	02
2,3	Paper found by Paper Near-end Sensor	00	0
	Paper not found by Paper Near-end Sensor	0C	12
4	Unused	10	16
5,6	Paper found by Paper-end Sensor	00	0
	Paper not found by Paper-end Sensor	60	96
7	Unused	00	0

Bits 2, 3: These bits are fixed to '0' when using the label paper.

[See Also]

DLE ENQ, GS a, and GS r, "IDENTIFICATION OF SEND STATUS" in APPENDIX 3

DLE ENQ n

[Function] Real-time request to printer

[Code] <10>H<05>H<n>

[Range] 1 ≦ n ≦ 2

[Outline] The printer responds in real-time to the request that the host specifies with number "n".

n	Function
1	After recovering from an error, the printer resumes printing from the beginning of the line where the error occurred.
2	The printer clears the receive buffer and the print buffer, and then recovers from the error.

[Caution]

- This command is only effective if an auto cutter error has occurred.
- This command is dealt with when it is received.
- This command is also executed even if the printer is in a receive-buffer full state.
- If another data string of <10>H<05>H<n> (1 ≦ n ≦ 2) is received, the printer acts in the same way as with this command. The user should, therefore, be reminded of this fact.

[Example 1]

If, for example, a command "ESC * m nL nH {d} k", where d1 = <10>H, d2=<05>H, d3=<01>H1, is given, the DLE ENQ n command cannot be interleaved into the code string of another command consisting of two bytes or more.

[Example 2]

- If the printer sends DLE ENQ 2 when the host has sent up to ESC 3 in its attempt to send ESC 3 n, the printer treats the ESC 3 as ESC 3 <10>H. Thus, the user should be careful.
- Even if DLE ENQ 2 is executed, the settings made by, for example, ESC ! and ESC 3 retain the conditions when the error occurred. A combined use of this command and ESC @ can completely initialize the printer.

[See Also] DLE EOT

DLE DC4 n m t

[Function] Outputting specified pulse in real-time.

[Code] <10>H<14>H<n><m><t>

[Range] n=1, m=0,1

1 ≦ t ≦ 8

[Outline] A signal specified with "t" is output to the connector pin specified with "m".

m	Connector pin
0	Pin No. 2 of drawer Kick-Out Connector
1	Pin No. 5 of drawer Kick-Out Connector

[Details]

- On-time and off-time are set at t × 100 msec, respectively.
- In case an error occurred during the processing of this command, the command is ignored.
- In case (ESC p or DLE DC4 under execution), during the processing of this command the command is ignored.
- This command will be processed as it is received.
- In specification of serial interface, the command is executed even in offline, reception buffer full and error conditions.
- In specification of parallel interface, this command cannot be executed while the printer is BUSY.
- This command will be valid, even if specifying the printer is invalid due to the selection of peripheral units (ESC =).

[Caution]

- If another command with the same data string as this is received, the printer operates the same way as with this command. The user should, therefore, be careful.
- The command cannot be inserted in another string of commands which consist of codes of 2 bytes or more.

[Reference] ESC p

ESC FF

[Function] Printing data in PAGE MODE

[Code] <1B>H<0C>H

[Outline] Executes a batch printout of the data mapped in the entire print area in PAGE MODE.

[Caution]
- This command is only effective when PAGE MODE is selected.
- Mapped data, as well as the ESC T and ESC W settings, and the character mapping position are held even after printing.

[See Also] "PAGE MODE" in APPENDIX 1

FF, ESC L, ESC S

ESC RS

[Function] Sound Buzzer

[Code] <1B>H<1E>H

[Outline] Sound the buzzer for 200 ms.

[Caution] This command is buffered before execution.

[Sample Program] LPRINT CHR$(&H1B);CHR$(&H1E);

[Execution Result] The buzzer sounds for approx. 200 ms.

ESC SP n

[Function] Setting the right spacing of the character

[Code] <1B>H<20>H<n>

[Range] 0 ≦ n ≦ 255

[Outline] Sets the right spacing of character to [n × basic calculation pitch] inches.

[Caution]

- If the horizontal magnification of character is 2 or more, the right spacing increases with the magnification.
- The right spacing can be set separately for the STANDARD and PAGE MODES.
- The basic calculation pitch is set by GS P. Once defined, the right spacing is not changed if the basic calculation pitch is changed by GS P.
- Fractions resulting from calculation are corrected with the minimum pitch of the mechanism, and the remainder is omitted.
- In STANDARD MODE, this command uses the horizontal basic calculation pitch (x).
- In PAGE MODE, the basic calculation pitch used by this command depends on the start point:

  (1) If the start point specified by ESC T is top left or bottom right, the command uses the horizontal basic calculation pitch (x).

  (2) If the start point specified by ESC T is top right or bottom left, the command uses the vertical basic calculation pitch (y).

- The maximum right spacing is capable of approximately 31.906 mm (255/203 inches). A setting greater than this maximum is trimmed to the maximum.

[Default] n = 0

[See Also] GS P

[Sample Program]

```
LPRINT CHR$(&H1B)   + “   ” + CHR$(0) ;
LPRINT “AAAAA” + CHR$(&HA) ;
LPRINT CHR$(&H1B)   + “   ” + CHR$(1) ;
LPRINT “AAAAA” + CHR$(&HA) ;
LPRINT CHR$(&H1B)   + “   ” + CHR$(12) ;
LPRINT “AAAAA” + CHR$(&HA) ;
END
```

[Print Results]

```
AAAAA          <------   0-dot space
A  A  A  A  A  <------   1-dot space
A    A    A    A    A   <------   12-dots space
```

ESC ! n

[Function] Collectively specifying the printing mode

[Code] <1B>H<21>H<n>

[Range] 0 ≦ n ≦ 255

[Outline] Printing mode is assigned.

Bit	Function	Value	
		0	1
0	Character Font	Font A	Font B
1	Undefined		
2	Undefined		
3	Emphasis	Canceled	Specified
4	Double height	Canceled	Specified
5	Double width	Canceled	Specified
6	Undefined		
7	Underline	Canceled	Specified

[Caution]

- With double height and double width being specified simultaneously, quadruple characters are created.
- An underline is attached to the full character width, which, however, is not attached to the part having been skipped by the horizontal tab. Neither is it attached to 90°-right-turned characters.
- The underline width is as specified by the <ESC –> command. (The default setting is 1 dot width.)
- In case characters with different vertical magnification ratios coexist on the same line, they are printed on the same base line.

[Default] n = 0

[See Also] ESC E, ESC –, GS !

[Sample Program]

```
LPRINT CHR$(&H1B) + “!” + CHR$(&H00) + “H” ;
LPRINT CHR$(&H1B) + “!” + CHR$(&H01) + “H” ;
LPRINT CHR$(&H1B) + “!” + CHR$(&H08) + “H” ;
LPRINT CHR$(&H1B) + “!” + CHR$(&H10) + “H” ;
LPRINT CHR$(&H1B) + “!” + CHR$(&H20) + “H” ;
LPRINT CHR$(&H1B) + “!” + CHR$(&HB9) + “H” ;
LPRINT CHR$(&HA) ;
END
```

[Print Results]

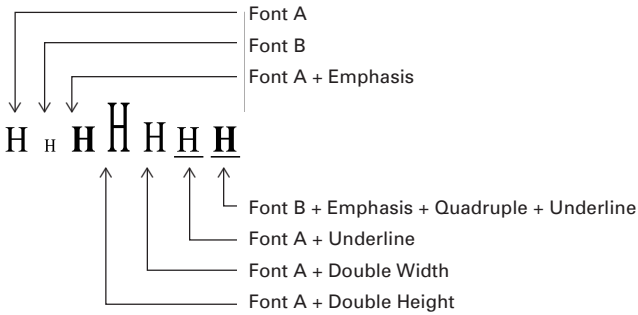

ESC $ n1 n2

[Function] Specifying the absolute positions

[Code] <1B>H<24>H<n1><n2>

[Range] 0 ≦ n1 ≦ 255

0 ≦ n2 ≦ 255

[Outline] The printing start position is specified with the number of dots (1/203 inch unit) from the beginning of a line.

- The number of dots is divided by 256, whose quotient is taken as “n2” and the residual as “n1”.
- Therefore, the printing start position is equal to n1 + n2 × 256 from the beginning of a line.

[Caution] The basic calculation pitch is set by GS P. After the line feed width is set, if the basic calculation by GS P leaves a fraction, the fraction is corrected with the minimum pitch of the mechanism, and the remainder is omitted.

In STANDARD MODE, this command uses the horizontal (Paper feed direction) basic calculation pitch (x).

In PAGE MODE, this command acts differently depending on the start point:

(1) If the start point specified by ESC T is top right or bottom left, the command uses the vertical (Paper feed direction) basic calculation pitch (y).

(2) If the start point specified by ESC T is top left or bottom right , the command uses the horizontal (Perpendicular to the paper feed direction) basic calculation pitch (x).

Specification beyond the end of the line is ignored.

[Default] The initial value is not defined.

[See Also] ESC \, GS P, GS \, GS $

[Sample Program]

```
LPRINT CHR$(&H1B) + “$” ;
LPRINT CHR$(0) + CHR$(0) + “A” ;
LPRINT CHR$(&H1B) + “$” ;
LPRINT CHR$(50) + CHR$(0) + “B” ;
LPRINT CHR$(&H1B) + “$” ;
LPRINT CHR$(0) + CHR$(1) + “C” ;
LPRINT CHR$(&HA) ;
LPRINT CHR$(&H1B) + “$” ;
LPRINT CHR$(100) + CHR$(0) + “A” ;
LPRINT CHR$(&H1B) + “\” ;
LPRINT CHR$(&HC2) + CHR$(&HFF) + “B” ;
LPRINT CHR$(&HA);
END
```

[Print Results]

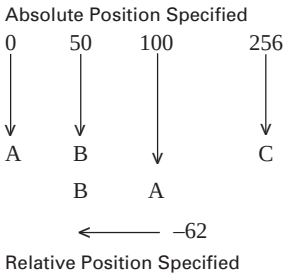

ESC % n

[Function] Specifying/Canceling download character set

[Code] <1B>H<25>H<n>

[Range] 0 ≦ n ≦ 255

[Outline] Specifying/canceling download characters.

• Only the lowest bit (n0) is valid for n.

n0	Function
0	Canceling download character set
1	Specifying download character set

[Caution] Download characters and download bit images cannot be defined simultaneously.

[Default] n = 0

[See Also] ESC &

[Sample Program]

```
GOSUB SETCHR
LPRINT CHR$(&H1B) + "%" + CHR$(0) ;
LPRINT "@A" + CHR$(&HA) ;
LPRINT CHR$(&H1B) + "%" + CHR$(1) ;
LPRINT "@A" +CHR$(&HA) ;
END
SETCHR:
LPRINT CHR$(&H1B) + "&" ;
LPRINT CHR$(3) + "@" + "A";
FOR J=1 TO 2
READ REP
LPRINT CHR$(REP) ;
FOR I=1 TO REP*3
READ D
LPRINT CHR$(D)
NEXT I
NEXT J
RETURN
```

```
DATA 6
DATA &HEF, &H80, &H00
DATA &H80, &H80, &H00
DATA &H80, &H80, &H00
DATA &H80, &H80, &H00
DATA &HFF, &HFF, &HFF
DATA &HFF, &HFF, &HFF
DATA 12
DATA &HFF, &HFF, &HFF
DATA &H80, &H07, &HF9
DATA &H80, &HFF, &HF9
DATA &H87, &HFE, &H01
DATA &H9F, &H06, &H01
DATA &HF8, &H06, &H01
DATA &HF8, &H06, &H01
DATA &H9F, &H06, &H01
DATA &H87, &HFE, &H01
DATA &H80, &HFE, &HF9
DATA &H80, &H07, &HF9
DATA &HFF, &HFF, &HFF
```

[Print Results]

@ A ←—— Internal Character Set

A ←—— Download Character

ESC & s n m [a [p] s×a] m–n+1

[Function] Defining the download characters

[Code] <1B>H<26>H<s>H<n><m>[<a><p1><p2> · · <ps × a>]m-n+1

[Range] s = 3

32 ≦ n ≦ m ≦ 126

0 ≦ a ≦ 12 (Font A)

0 ≦ a ≦ 9 (Font B)

0 ≦ p1 · · ps × a ≦ 255

[Outline] Defines the font of download characters of alphanumeric characters.

- "s" indicates the number of bytes in vertical direction.
- "n" indicates the start character code and "m" the end character code. To define only one character, set n=m.
- Character codes definable includes 95 ASCII codes in total in the range of <20>H to <7E>H.
- "a" indicates the number of dots to be defined in horizontal direction.
- "p" is the data to be defined, which indicate a pattern equal to "a" dots in horizontal direction from the left end. The rest of the pattern on the right side is filled with space.

  The number of data to be defined is s × a.
- Download characters thus defined remain valid until redefinition, ESC @, GS ⁎, FS q execution, ESC ? deletion or power OFF is performed.

[Caution]

- Download characters and download bit images cannot be defined simultaneously.
- Running this command clears the definition of the download bit image.

[Default] Same as the internal character set.

[See Also] ESC %, ESC ?

[Example]

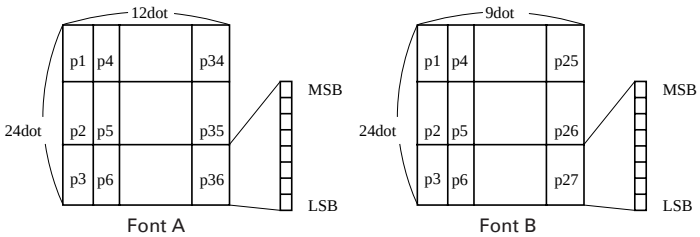

Create each data bit by setting “1” for a printed dot and “0” for an unprinted dot.

[Sample Program] Refer to Sample Program and Print Results for ESC % on page 62.

ESC * m n1 n2 [d] k

[Function] Specifying the bit image mode

[Code] <1B>H<2A>H<m><n1><n2> [<d>] k

[Range] m= 0, 1, 32, 33

$0 \leqq n1 \leqq 255$

$0 \leqq n2 \leqq 3$

$0 \leqq d \leqq 255$

$k = n1 + 256 \times n2$ (m = 0, 1)

$k = (n1 + 256 \times n2) \times 3$ (m = 32, 33)

[Outline] According to the number of dots specified in "n1", "n2", specify the bit image of mode "m".

- The number of dots printed is divided by 256, whose quotient is taken as n2 and residual as "n1".
- The total number of dots printed in the horizontal direction is equal to n1 + (256 × n2).
- When bit image data have been input in excess of dot positions that can be printed on one line, the excess data are discarded.
- "d" is bit image data. Bits to be printed are specified as "1" and those not as "0".
- The bit image modes specified by m are shown as follows:

m	Mode	Vertical Direction		Horizontal Direction	
		No. of Dots	Dot Density	Dot Density	Max. No. of Dots
0	8-dots single density	8	67 DPI	101 DPI	288
1	8-dots double density	8	67 DPI	203 DPI	576
32	24-dots single density	24	203 DPI	101 DPI	288
33	24-dots double density	24	203 DPI	203 DPI	576

[Caution]

- When the value of m is out of the above range, the data following after n1 is processed as normal printing data.
- After completion of bit image printing, the printer returns to normal data processing mode.

[Sample Program]

```
LPRINT CHR$(&H1B)  +  "*";
LPRINT CHR$(0) + CHR$(20) + CHR$(0);
GOSUB IMG1
LPRINT CHR$(&HA);
LPRINT CHR$(&H1B  +  "*";
LPRINT CHR$(1) + CHR$(20) + CHR$(0);
GOSUB IMG1
LPRINT CHR$(&HA);
LPRINT CHR$(&H1B) + "*";
LPRINT CHR$(32) + CHR$(20) + CHR$(0);
GOSUB IMG2
LPRINT CHR$(&HA);
LPRINT CHR$(&H1B)  +  "*";
LPRINT CHR$(33) + CHR$(20) + CHR$(0);
GOSUB IMG2
LPRINT CHR$(&HA);
END
```

```
IMG1:
   LPRINT CHR$(&HFF);
   FOR I=1 TO 18
     LPRINT CHR$(&H85);
   NEXT I
   LPRINT CHR$(&HFF);
   RETURN
IMG2:
   LPRINT CHR$(&HFF);
   LPRINT CHR$(&HFF);
   LPRINT CHR$(&HFF);
   FOR I=1 TO 18
     LPRINT CHR$(&H80);
     LPRINT CHR$(&H00);
     LPRINT CHR$(&H05);
   NEXT I
   LPRINT CHR$(&HFF);
   LPRINT CHR$(&HFF);
   LPRINT CHR$(&HFF);
   RETURN
```

[Print Results]

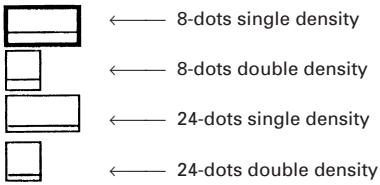

ESC – n

[Function] Specifying/Canceling underline

[Code] <1B>H<2D>H<n>

[Range] 0 ≦ n ≦ 2

48 ≦ n ≦ 50

[Outline] Specifying/canceling an underline.

n	Function
0.48	Canceling an underline
1.49	Specifying an underline for 1-dot width
2.50	Specifying an underline for 2-dots width

[Caution]

- An underline is attached to the full character width. It is, however, not attached to the part having been skipped by horizontal tab command.
- An underline is not attached to a 90°- right-turned characters.

[Default] n = 0

[See Also] ESC !, FS -

[Sample Program]

```
LPRINT CHR$(&H1B) + "-" + CHR$(0);
LPRINT "AAAAA";
LPRINT CHR$(&H1B) + "-" + CHR$(1);
LPRINT "AAAAA" + CHR$(&HA);
END
```

[Print Results]

Underline Canceled

A A A A A A A A A A

Underline Specified

ESC 2

[Function] Specifying 1/6-inch line feed rate

[Code] <1B>H<32>H

[Outline] The line feed rate per line is specified by 1/6 inch.

[Caution] Line feed rate can be specified respectively for both STANDARD MODE and PAGE MODE.

[Sample Program]

```
LPRINT “AAAAA” + CHR$(&HA);
LPRINT CHR$(&H1B) + “3” + CHR$(0);
LPRINT “AAAAA” + CHR$(&HA);
LPRINT CHR$(&H1B) + “3” + CHR$(50);
LPRINT “AAAAA” + CHR$(&HA);
LPRINT CHR$(&H1B) + “2”;
LPRINT “AAAAA” + CHR$(&HA);
LPRINT “AAAAA”;
LPRINT CHR$(&H1B) + “J” + CHR$(100);
LPRINT “AAAAA” + CHR$(&HA);
LPRINT “AAAAA” + CHR$(&HA);
END
```

[Print Results]

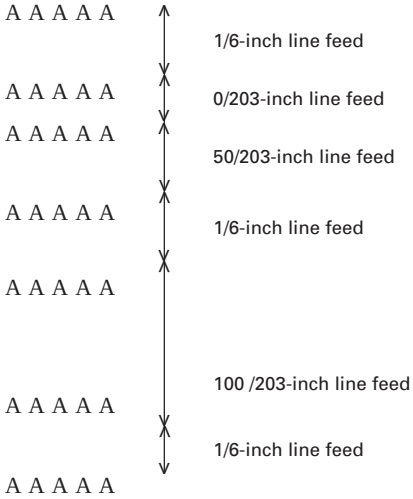

ESC 3 n

[Function] Setting line feed rate of minimum pitch

[Code] <1B>H<33>H<n>

[Range] 0 ≦ n ≦ 255

[Outline] Sets the line feed width per line to [n × basic calculation pitch] inches.

[Caution] The line feed width can be set separately for the STANDARD and PAGE MODES.

The basic calculation pitch is set by GS P. Once defined, the line feed width is not changed if the basic calculation pitch is changed by GS P.

Fractions resulting from calculation are corrected with the minimum pitch of the mechanism, and the remainder is omitted.

- In STANDARD MODE, this command uses the vertical (Paper feed direction) basic calculation pitch (y).
- In PAGE MODE, this command acts differently depending on the start point:
  (1) If the start point specified by ESC T is top left or bottom right, the command uses the vertical (Paper feed direction) basic calculation pitch (y).
  (2) If the start point specified by ESC T is top right or bottom left, the command uses the horizontal (Perpendicular to the paper feed direction) basic calculation pitch (x).

The maximum settable line feed width is 1016 mm (40 inches). A setting greater than this maximum is trimmed to the maximum.

[Default] Approx 4.23 mm

[See Also] ESC 2, GS P

ESC = n

[Function] Data input control

[Code] <1B>H<3D>H<n>

[Range] 0 ≦ n ≦ 255

[Outline] Selecting equipment for which data input from the host is valid.

• Each bit of "n" indicates as follows:

Bit	Equipment	Value	
		0	1
0	Printer	Invalid	Valid
1	Not defined		
2	Not defined		
3	Not defined		
4	Not defined		
5	Not defined		
6	Not defined		
7	Not defined		

• When the printer has not been selected, this printer abandons all the received data until it is selected by this command.

[Caution]

• Even when the printer has not been selected, it can become BUSY state through printer operation.

• When the printer is deselected, this printer discards all the data until it is selected with this command. (Except DLE EOT, DLE ENQ, and DLE DC4)

[Default] n = 1

ESC ? n

[Function] Deleting download characters

[Code] <1B>H<3F>H<n>

[Range] 32 ≦ n ≦ 126

[Outline] Deletes the downloaded characters of specified code.

[Caution]

- The character “n” indicates the character code used to delete the defined pattern. After the deletion, characters are printed in the same pattern as the internal characters.
- This command deletes the code-defined pattern of the character font selected by ESC !.
- This command is ignored if the specified character code is undefined.

[See Also] ESC &, ESC %

ESC @

[Function] Initializing the printer

[Code] <1B>H<40>H

[Outline] Clears data stored in the print buffer and brings various settings to the initial state (Default state).

[Caution]

- The settings of DIP switches are not read again.
- Data inside the internal input buffer is not cleared.
- Macro definitions are not cleared.
- NV bit image definitions are not cleared.

[Sample Program]

```
LPRINT CHR$(&H1B) + “!” + CHR$(&H30);
LPRINT CHR$(&H1B) + “V” + CHR$(1);
LPRINT “AAA” + CHR$(&HA);
LPRINT CHR$(&H1B) + “@”;
LPRINT “AAA” + CHR$(&HA);
END
```

[Print Results]

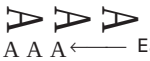

Each setting has been initialized by this command.

ESC D [n] k NUL

[Function] Setting horizontal tab position

[Code] <1B>H<44>H [<n>] k<00>

[Range] 1 ≦ n ≦ 255

0 ≦ k ≦ 32

[Outline] Specifying a horizontal tab position.

- "n" indicates the number of columns from the beginning to the horizontal tab position. Note, however, that "n= set position – 1". For example, to set the position at 9th column, n=8 is to be specified.
- "k" denotes the number of horizontal tab positions you want to set.
- The tab position is set at a position where it is "character width × n" from the beginning of a line. The character width, at this time, includes the space on the right. In double width characters, it is made double the ordinary case.
- Tab positions that can be specified are maximum 32. Specifying tab positions exceeding this limit is ignored.
- <n> k, which denotes a setting position, is input in the increasing order and ends at <00> H.
- ESC D <NUL> clears all the set tab positions. Following clearing, the horizontal tab command is ignored.

[Caution] When the data, <n> k, is equal to or smaller than its preceding data, <n> k-1, it is assumed that tab setting is finished. If this is the case, the next data onward will be processed as normal data.

When the data, <n> k, exceeds a 1-line print area, set the horizontal tab position, as "Set column position = Maximum print columns + 1". The horizontal tab position does not change even if the character width is altered after setting the horizontal tab position.

[Default]

- Tab positions are set at eight-character intervals (9th., 17th., 25th. columns) of Font A.

[See Also] HT

[Sample Program] Refer to Sample Program and Print Results for HT on page 45.

ESC E n

[Function] Specifying/Canceling Emphasis Printing

[Code] <1B>H<45>H<n>

[Range] 0 ≦ n ≦ 255

[Outline] Specifying/canceling the emphasized characters.

- "n" is valid only for the lowest bit (n0).
- Control by the lowest bit (n0) is shown as follows:

n0	Function
0	Canceling emphasis printing
1	Specifying emphasis printing

- This is effective to all characters.
- Dot configuration of a emphasized character includes one extra dot added at its side.
- Emphasis printing can also be specified using ESC !, however, ESC E or ESC !, whichever command is processed last, takes precedence.

[See Also] ESC !

[Sample Program]

```
LPRINT CHR$(&H1B) + "E" + CHR$(0);
LPRINT "AAABBB" + CHR$(&HA);
LPRINT CHR$(&H1B) + "E" + CHR$(1);
LPRINT "AAABBB" + CHR$(&HA);
END
```

[Print Results]

A A A B B B ←—— Emphasis canceled

A A A B B B ←—— Emphasis specified

ESC G n

[Function] Specifying/Canceling Double strike printing

[Code] <1B>H<47>H<n>

[Range] 0 ≦ n ≦ 255

[Outline] Specifying/canceling the double strike printing.

- "n" is valid only for the lowest bit (n0).
- Control by the lowest bit (n0) is shown as follows.

n0	Function
0	Canceling double strike printing
1	Specifying double strike printing

This is effective to all characters.

[Caution] With this printer,double-strike printing and emphasis printing provide completely the same results.

[See Also] ESC E

[Sample Program]

```
LPRINT CHR$(&H1B) + "G" + CHR$(0);
LPRINT "AAABBB" + CHR$(&HA);
LPRINT CHR$(&H1B) + "G" + CHR$(1);
LPRINT "AAABBB" + CHR$(&HA);
END
```

[Print Results]

A A A B B B ←—— Double strike printing canceled

A A A B B B ←—— Double strike printing specified

ESC J n

[Function] Printing and feeding paper in minimum pitch

[Code] <1B>H<4A>H<n>

[Range] 0 ≦ n ≦ 255

[Outline] Prints the data held in the print buffer and feeds paper by [n × basic calculation pitch] inches. The beginning of the line is taken as the next print start position.

[Caution] The line feed width can be set separately for the STANDARD and PAGE MODES.

- This command does not affect the line feed width defined by ESC 2 or ESC 3.
- The basic calculation pitch is set by GS P.
- Fractions resulting from calculation are corrected with the minimum pitch of the mechanism, and the remainder is omitted.
- In STANDARD MODE, this command uses the vertical (Paper feed direction) basic calculation pitch (y).
- In PAGE MODE, this command acts differently depending on the start point:

(1) If the start point specified by ESC T is top left or bottom right, the command uses the vertical (Paper feed direction) basic calculation pitch (y).

(2) If the start point specified by ESC T is top right or bottom left, the command uses the horizontal (Perpendicular to the paper feed direction) basic calculation pitch (x).

The maximum settable line feed width is 1016 mm (40 inches). A setting greater than this maximum is trimmed to the maximum. The beginning of the line is taken as the next print start position.

[Default] The initial value is not defined.

[Sample Program] Refer to Sample Program and Print Results for ESC 2 on page 68.

ESC L

[Function] Selecting PAGE MODE

[Code] <1B>H<4C>H

[Outline] Switches from STANDARD MODE to PAGE MODE.

[Caution]

- This command is only effective if it entered at the beginning of a line.
- This command is not effective if it is entered when in PAGE MODE.
- STANDARD MODE is restored when printing specified by FF is finished or when ESC S is issued.
- The character mapping start position will be the point specified by ESC T in the print area specified by ESC W.
- The commands listed below, which have separate settings for PAGE MODE and STANDARD MODE, are changed to the settings for PAGE MODE use.
  (1) Spacing setting: ESC SP
  (2) Line feed width setting: ESC 2, ESC 3
- The following commands are valid only in PAGE MODE.
  (1) ESC V Specifying/canceling 90°-right-turned characters.
  (2) ESC a Aligning the characters.
  (3) ESC { Specifying/canceling the inverted characters.
  (4) GS L Setting the left margin.
  (5) G3S W Setting the print area width.
- ESC @ restores STANDARD MODE.

[See Also] “PAGE MODE” in APPENDIX 1

FF, CAN, ESC FF, ESC S, ESC T, ESC W, GS $, GS \

ESC M n

[Function] Selection of character fonts

[Code] <1B>H<4D>H<n>

[Definition value] n=0, 1, 48, 49

[Outline] Selects character fonts.

n	Function
0, 48	Selection of font A (12 × 24)
1, 49	Selection of font B (9 × 24)

[Details] ESC ! can also select fonts, but the setting made by the command that has last been processed becomes valid.

[Reference] ESC !

ESC R n

[Function] Selecting the international character set

[Code] <1B>H<52>H<n>

[Range] 0 ≦ n ≦ 10

[Outline] Depending on the value of "n", one of the following character sets is specified;

n	Character Set
0	U.S.A.
1	France
2	Germany
3	U.K.
4	Denmark I
5	Sweden
6	Italy
7	Spain I
8	Japan
9	Norway
10	Denmark II
11	Spain II
12	Latin America
13	Korea

[Default] n = 0

[See Also] Character Code Table (International Character Set)

ESC S

[Function] Selecting STANDARD MODE

[Code] <1B>H<53>H

[Outline] Switches from PAGE MODE to STANDARD MODE.

[Caution]

- This command is only effective if it is entered when in PAGE MODE.
- Any data mapped in PAGE MODE is erased.
- After this command is executed, the beginning of the line is taken as the next print start position.
- The print area defined by ESC W is initialized.
- The commands listed below, which have separate settings for STANDARD MODE and PAGE MODE, are changed to the settings for STANDARD MODE use.

  (1) Spacing setting: ESC SP

  (2) Line feed width setting: ESC 2, ESC 3
- STANDARD MODE is selected when the printer is turned on or reset,or when ESC @ is executed.

[See Also] FF, ESC FF, ESC L

ESC T n

[Function] Selecting the character printing direction in PAGE MODE

[Code] <1B>H<54>H<n>

[Range] 0 ≦ n ≦ 3

48 ≦ n ≦ 51

[Outline] Selects the direction and start point of character printing in PAGE MODE.

n	Printing direction	Start point
0, 48	Left to right	Top left (“A” in the figure)
1, 49	Bottom to top	Bottom left (“B” in the figure)
2, 50	Right to left	Bottom right (“C” in the figure)
3, 51	Top to bottom	Top right (“D” in the figure)

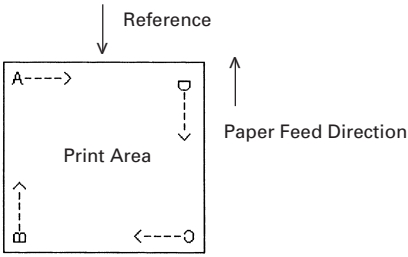

[Caution]

- When STANDARD MODE is selected, this command only executes the internal flagging of the printer without affecting the printing in STANDARD MODE.
- The character mapping position will be the start point of the print area specified by ESC W.
- The basic calculation pitch (x or y) used by the following commands varies with the start point.

  (1) If the start point is the top left or bottom right (The characters are mapped in the direction perpendicular to the paper feed),

  - Commands using x: ESC SP, ESC S, ESC \
  - Commands using y: ESC 3, ESC J, GS $, GS \

  (2) If the start point is the top right or bottom left (The characters are mapped in the paper feed direction),

  - Commands using x: ESC 3, ESC J, GS $, GS \
  - Commands using y: ESC SP, ESC S, ESC \

[Default] n = 0

[See Also] “PAGE MODE” in APPENDIX 1

ESC $, ESC L, ESC W, ESC \, GS $, GS P, GS \

ESC V n

[Function] Specifying/Canceling 90°-right-turned characters

[Code] <1B>H<56>H<n>

[Range] n = 0, 1, 48, 49

[Outline] Specifying/canceling 90°-right- turned characters.

n	Function
0, 48	Canceling 90°-right- turned Characters
1, 49	Specifying 90°-right- turned Characters

[Caution] No underlines are attached to 90°-right- turned characters .

[Default] n = 0

[Sample Program]

```
LPRINT CHR$(&H1B) + “V” + CHR$(0);
LPRINT “AAAAA”;
LPRINT CHR$(&H1B) + “V” + CHR$(1);
LPRINT “AAAAA” + CHR$(&HA);
END
```

[Print Results]

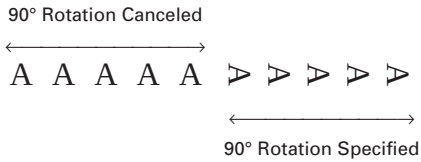

ESC W xL xH yL yH dxL dxH dyL dyH

[Function] Defining the print area in PAGE MODE

[Code] <1B>H<57>H<xL><xH><yL><yH><dxL><dxH><dyL><dyH>

[Range] 0 ≦ xL, xH, yL, yH, dxL, dxH, dyL, dyH ≦ 255,
except for dxL = dxH = 0 or dyL = dyH = 0

[Outline] Defines the location and size of the print area.

- Horizontal start point = [(xL + xH × 256) × basic calculation pitch] inches
- Vertical start point = [(yL + yH × 256) × basic calculation pitch] inches
- Horizontal length = [(dxL + dxH × 256) × basic calculation pitch] inches
- Vertical length = [(dyL + dyH × 256) × basic calculation pitch] inches

[Caution]

- When STANDARD MODE is selected, this command only executes the internal flagging of the printer without affecting the printing in STANDARD MODE.
- If the horizontal start point or vertical start point is out of the printable area, this command is canceled and the next data is handled as normal data.
- If the horizontal length or vertical length is 0, this command is canceled and the next data is handled as normal data.
- The character mapping position will be the start point specified by ESC T in the print area.
- If the “horizontal start point + horizontal length” is greater than the horizontal printable area, the “horizontal printable area - horizontal start point” is taken as the horizontal length.
- If the “vertical start point + vertical length” is greater than the vertical printable area, the “vertical printable area - vertical start point” is taken as the vertical length.
- The basic calculation pitch is defined by GS P. Once defined, the print area is not changed if the basic calculation pitch is changed by GS P.
- Fractions resulting from calculations are corrected with the minimum pitch of the mechanism, and the remainder is omitted.
- The horizontal start point and horizontal length are calculated with the basic calculation pitch (x). The vertical start point and vertical length are calculated with the basic calculation pitch (y).

• The figure below illustrates the print area, where X = horizontal start point, Y=vertical start point, Dx=horizontal length, and Dy=vertical length.

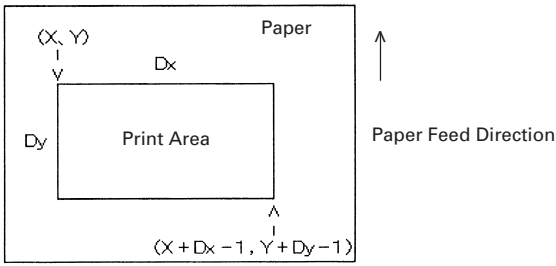

The printable area for this printer is approximately 72.070 mm (576/203 inches) horizontally and 117 mm (1662/360 inches) vertically.

[Default] xL=xH=yL=yH=0

dxL=64, dxH=2, dyL=126, dyH=6 (When 58mm wide paper is used: dxL=176, dxH=1)

[See Also] "PAGE MODE" in APPENDIX 1

CAN, ESC L, ESC T, GS P

ESC \ nL nH

[Function] Specifying the relative position

[Code] <1B>H<5C>H<nL><nH>

[Range] 0 ≦ nL ≦ 255

0 ≦ nH ≦ 255

[Outline] This command specifies the next print start position in a relative position with respect to the current position. The next print start position will be at a point of [(nL + nH × 256) × basic calculation pitch] inches away from the current position.

[Caution]

- Specification of a position outside the print area is ignored.
- If a new position is specified to the right of the current position in the direction of printing, it should be specified as positive (+). If it is to the left, it should be as negative(-).
- A negative value is the complement of 65536. For example, to move the position by N pitches to the left, specify it as:

  nL + nH × 256 = 65536 - N
- The basic calculation pitch is set by GS P.
- Fractions resulting from calculation are corrected with the minimum pitch of the mechanism, and the remainder is omitted.
- In STANDARD MODE, this command uses the horizontal basic calculation pitch (x).
- In PAGE MODE, this command acts differently depending on the start point:

  (1) If the start point specified by ESC T is top left or bottom right, the command specifies the relative position in the direction perpendicular to the paper feed (The character's side-to-side direction), using the horizontal basic calculation pitch (x).

  (2) If the start point is top right or bottom left, the command specifies the relative position in the paper feed direction (The character's side-to-side direction), using the vertical basic calculation pitch (y).

[See Also] ESC $, GS P

[Sample Program] Refer to Sample Program and Print Results for ESC $ on page 60.

ESC a n

[Function] Aligning the characters

[Code] <1B>H<61>H<n>

[Range] 0 ≦ n ≦ 2

48 ≦ n ≦ 50

[Outline] All the printed data within one line are aligned in the specified position.

- Depending on the value "n", positional alignment is carried out as shown in the table below:

n	Position
0,48	Left end alignment
1,49	Centering
2,50	Right end alignment

[Caution]

- This command is valid only when it is inputted at the beginning of a line.
- This command does not affect the PAGE MODE.

[Default] n = 0

[Sample Program]

```
LPRINT CHR$(&H1B) + "a" + CHR$(0);
LPRINT "AAAAA" + CHR$(&HA);
LPRINT CHR$(&H1B) + "a" + CHR$(1);
LPRINT "AAAAA" + CHR$(&HA);
LPRINT CHR$(&H1B) + "a" + CHR$(2);
LPRINT "AAAAA" + CHR$(&HA);
END
```

[Print Results]

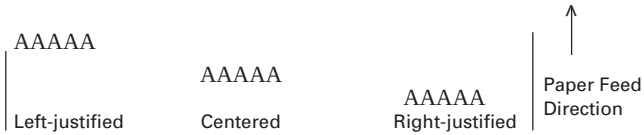

ESC c 3 n

[Function] Selecting the Paper Sensor valid for a paper end signal output

[Code] <1B>H<63>H<33>H<n>

[Range] 0 ≦ n ≦ 255

[Outline] This command selects by which Paper Sensor a paper end signal should be output. Each bit for "n" has the following meaning:

Bit	Position	Value	
		0	1
0	Paper Near-end	Disabled	Enabled
1	Paper Near-end	Disabled	Enabled
2	Paper end	Disabled	Enabled
3	Paper end	Disabled	Enabled
4	Undefined		
5	Undefined		
6	Undefined		
7	Undefined		

[Caution] This command is valid only for the parallel interface.

The bit0 and 1 are ignored when using the label paper.

[Default] n = 15

n = 12 (When using the label paper)

ESC c 4 n

[Function] Selecting the Paper Near-end Sensor valid for print stop

[Code] <1B>H<63>H<34>H<n>

[Range] 0 ≦ n ≦ 255

[Outline] This command selects the Paper Near-end Sensor which helps to stop printing when the paper supply almost runs out.

Each bit for "n" has the following meaning:

Bit	Position	Value	
		0	1
0	Paper Near-end	Disabled	Enabled
1	Paper Near-end	Disabled	Enabled
2	Undefined		
3	Undefined		
4	Undefined		
5	Undefined		
6	Undefined		
7	Undefined		

This printer can only select one kind of Paper Sensor, a Paper Near-end Sensor.

[Caution] This command is ignored when using the label paper.

[Default] n = 0

ESC c 5 n

[Function] Enabling/Disabling the panel switches

[Code] <1B>H<63>H<35>H<n>

[Range] 0 ≦ n ≦ 255

[Outline] Enabling/disabling the FEED switch.

• "n" is valid only in the lowest bit.

n0	Condition
0	FEED switch valid
1	FEED switch invalid

[Caution] When the panel switch is disabled with this command, the FEED switch is also disabled. Therefore, the paper cannot be fed by operating the FEED switch. Regardless of the setting of this command, the FEED switch is always enable while the switch is being waited for at the time of macro execution.

[Default] n = 0

[Sample Program]

```
LPRINT CHR$(&H1B) + "c5" + CHR$(0);  ← When enabling the FEED switch
LPRINT CHR$(&H1B) + "c5" + CHR$(1);  ← When disabling the FEED switch
```

ESC d n

[Function] Printing and feeding the paper by “n” lines

[Code] <1B>H<64>H<n>

[Range] 0 ≦ n ≦ 255

[Outline] Prints data in the print buffer and feeds paper by “n” lines.

- Specified lines do not remain.
- The beginning of the line is specified as the next print start position.

[Caution] If [n × line feed width] exceeds approximately 1016 mm, this command feeds paper by approximately 1016 mm (40 inches).

[Default] The initial value is not defined.

[Sample Program]

```
LPRINT “AAAAA”;
LPRINT CHR$(&H1B) + “d” + CHR$(2);
LPRINT “AAAAA” + CHR$(&HA);
END
```

[Print Results]

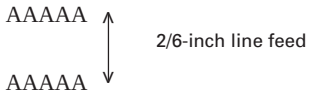

ESC p m n1 n2

[Function] Generating the specified pulses

[Code] <1B>H<70>H<m><n1><n2>

[Range] m = 0, 1, 48, 49

0 ≦ n1 ≦ 255

0 ≦ n2 ≦ 255

[Outline] The signals specified by "n1" and "n2" are output to the connector pin specified by "m".

- "m" has the followings.

m	Connector Pin
0, 48	Drawer Kick-Out pin No.2
1, 49	Drawer Kick-Out pin No.5

- The ON time is n1 × 2 ms, and OFF time n2 × 2 ms.

[Caution]

- When "m" is beyond a definition range, no signal is output, discarding "n1" and "n2".
- The drawer drive duty must be within the following range:

$$\frac{\text{ON time}}{\text{ON time + OFF time}} \leqq 0.2$$

(The OFF time should be 4 times or more longer than the ON time.)

[Default] The initial value for "m", "n1" and "n2" is not defined.

[Sample Program]

```
LPRINT CHR$(&H1B) + "p";
LPRINT CHR$(0);   ←——— Selects pin No. 2.
LPRINT CHR$(5);   ←——— Sets ON time to 10ms
LPRINT CHR$(50);  ←——— Sets OFF time to 100ms
END
```

ESC t n

[Function] Selecting the character code table

[Code] <1B>H<74>H<n>

[Range] 0 ≦ n ≦ 9, n = 255

[Outline] Selecting the character code table:

The character code table is selected based on the value of “n”.

n	Character Code Table
0	Codepage PC437 (USA, European Standard)
1	Codepage Katakana (Japanese)
2	Codepage PC850 (Multilingual)
3	Codepage PC860 (Portuguese)
4	Codepage PC863 (Canadian-French)
5	Codepage PC865 (Nordic)
6	Codepage PC852 (Eastern Europe)
7	Codepage PC866 (Russian)
8	Codepage PC857 (Turkish)
9	Windows Codepage
255	Space Page(For user setting)

[Default] This is a character code table specified with DIP Switch.

[See Also] Refer to “11. CHARACTER CODES TABLE“

[Sample Program]

```
LPRINT CHR$(&H1B) + “t” + CHR$(0);
LPRINT “n”=0;
FOR C=&HB2 TO &HB5
  LPRINT CHR$(C);
NEXT C
LPRINT CHR$(&HA);
LPRINT CHR$(&H1B) + “t” + CHR$(9);
LPRINT “n”=9;
FOR C=&HB2 TO &HB5
  LPRINT CHR$(C);
NEXT C
LPRINT CHR$(&HA);
END
```

[Print Results]

n = 0 ▒ | ┤ ╡ ⟵ n = 0

n= 9 2 3 ′ µ ⟵ n = 9

ESC { n

[Function] Specifying/Canceling the inverted characters

[Code] <1B>H<7B>H<n>

[Range] 0 ≦ n ≦ 255

[Outline] Specifying/canceling inverted characters.

- "n" is valid only for the lowest bit (n0).
- Control by the lowest bit (n0) is shown as follows:

n0	Condition
0	Canceling inverted characters.
1	Specifying inverted characters.

[Caution]

- Inverted printing means printing the line turned 180°.
- This command is valid only when it is specified at the beginning of a line.
- This command does not affect the PAGE MODE.

[Default] n = 0

[Sample Program]

```
LPRINT CHR$(&H1B) + "{" + CHR$(0);
LPRINT "AAAAA" + CHR$(&HA);
LPRINT "BBBBB" + CHR$(&HA);
LPRINT CHR$(&H1B) + "{" + CHR$(1);
LPRINT "AAAAA" + CHR$(&HA);
LPRINT "BBBBB" + CHR$(&HA);
END
```

[Print Results]

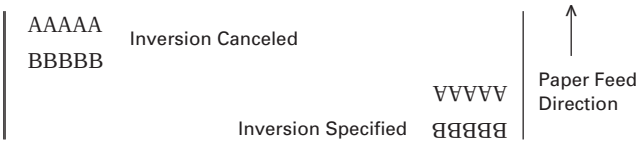

GS ! n

[Function] Specifying the character size

[Code] <1D>H<21>H<n>

[Range] 0 ≦ n ≦ 255, where:

1 ≦ vertical magnification ≦ 8,

1 ≦ horizontal magnification ≦ 8

[Outline] Specifies the character size (Vertical and horizontal magnification).

Bit	Function	Value	
		Hex. Number	Decimal Number
0	Vertical magnification specification	Refer to Table 2, "Vertical Magnification".	
1			
2			
3			
4	Horizontal magnification specification	Refer to Table 1, "Horizontal Magnification".	
5			
6			
7			

Table 1 Horizontal Magnification

Hex.	Decimal	Magnification
00	0	1 ×(Standard)
10	16	2 ×(Double width)
20	32	3 ×
30	48	4 ×
40	64	5 ×
50	80	6 ×
60	96	7 ×
70	112	8 ×

Table 2 Vertical Magnification

Hex.	Decimal	Magnification
00	0	1 ×(Standard)
01	1	2 ×(Double height)
02	2	3 ×
03	3	4 ×
04	4	5 ×
05	5	6 ×
06	6	7 ×
07	7	8 ×

[Caution]

- This command works for all ANK characters except for HRI characters.
- This command is ignored if either the vertical magnification or horizontal magnification is out of the defined range.
- In STANDARD MODE, the vertical direction is defined as the paper feed direction, and the horizontal direction is defined as the direction perpendicular to the paper feed. These definitions are, therefore, interchanged when 90°-right-turned characters are specified.
- In PAGE MODE, the vertical direction means the top-bottom direction of each character. The horizontal direction means the side-to-side direction of each character.

- If characters of different vertical magnification are contained in a line, the baseline of each character is lined up.
- Horizontal and vertical magnification can also be specified/canceled by ESC !.

  The ESC ! or GS ! command, whichever is handled last, becomes effective.

[Default] n = 0

[See Also] ESC !

GS $ nL nH

[Function] Specifying the absolute vertical position of characters in PAGE MODE

[Code] <1D>H<24>H<nL><nH>

[Range] 0 ≦ nL ≦ 255

0 ≦ nH ≦ 255

[Outline] This command is used in PAGE MODE to specify the vertical position of characters at the data mapping start position as an absolute value measured from the start point. The vertical position of a character at the next data mapping start position will be at a point [(nL + nH × 256) × basic calculation pitch] inches away from the start point.

[Caution]

- This command is ignored when PAGE MODE is not selected.
- Any specification of absolute vertical position out of the print area is ignored.
- The horizontal position of a character at the data mapping start position is not moved.
- The start point used as the reference is specified by ESC T.
- Depending on the start point specified by ESC T, this command acts as follows:
  (1) If the start point is the top left or bottom right, the command specifies the absolute position in the paper feed direction (The character's top-bottom direction), using the vertical basic calculation pitch (y).
  (2) If the start point is the top right or bottom left, the command specifies the absolute position in the direction perpendicular to the paper feed (The character's top-bottom direction) using the horizontal basic calculation pitch (x).
- The basic calculation pitch is set by GS P.
- Fractions resulting from calculations are corrected with the minimum pitch of the mechanism, and the remainder is omitted.

[See Also] ESC $, ESC T, ESC W, ESC \, GS P, GS \

GS ＊ n1 n2 [d] n1×n2×8

[Function] Defining the download bit image

[Code] <1D>H<2A>H<n1><n2> [< d >] n1 × n2 × 8

[Range] 1 ≦ n1 ≦ 255

1 ≦ n2 ≦ 48

n1 × n2 ≦ 1536

0 ≦ d ≦ 255

[Outline] Defines download bit images of the number of dots specified by n1 and n2.

- The numbers of dots are n1 × 8 in horizontal direction and n2 × 8 in vertical direction.
- "d" indicates bit image data.
- Once defined, the download bit image remains effective until redefinition, ESC @ execution, ESC &, or power OFF takes place.

[Caution]

- Relations between the bit image data and the dots defined are shown below.
- A download character and a download bit image cannot be defined simultaneously.

  With this command executed, the defined content of a downloaded character is cleared.

[See Also] GS /

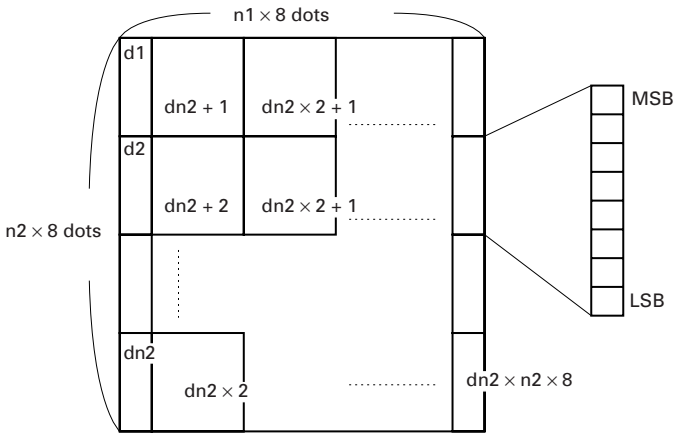

[Sample Program]

```
GOSUB IMG
LPRINT CHR$(&H1D) + "/" + CHR$(0);
LPRINT CHR$(&H1D) + "/" + CHR$(1);
LPRINT CHR$(&H1D) + "/" + CHR$(2);
LPRINT CHR$(&H1D) + "/" + CHR$(3);
END
IMG:
n1=10 : n2=5
LPRINT CHR$(&H1D) + "*";
LPRINT CHR$(n1) + CHR$(n2);
FOR J=1 TO n1*8
  FOR I=1 TO n2
    LPRINT CHR$(J);
  NEXT I
NEXT J
RETURN
```

[Print Results]

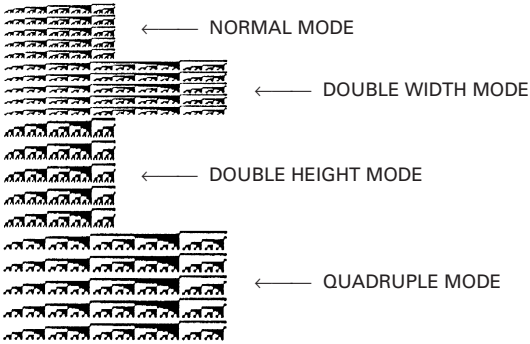

GS (A pL pH n m

[Function] Execution of test printing

[Code] <1D>H<28>H<41>H<pL><pH><n><m>

[Definition] (pL+(pH × 256))=2 (pL=2, pH=0)

0 ≦ n ≦ 2, 48 ≦ n ≦ 50

1 ≦ m ≦ 3, 49 ≦ m ≦ 51

[Outline] Specified test printing will be executed.

- pL, pH will specify the number of subsequent parameters by (pL+(pH × 256))bytes.
- n will specify the paper for test printing in the following table.

n	Category of paper
0, 48	Basic paper (Paper rolls)
1, 49 2, 50	Paper rolls

- m will specify the category of test printing in the following table.

m	Category of test printing
1, 49	Hexadecimal dump
2, 50	Printer's status printing
3, 51	Rolling pattern printing

[Details]

- This command is only valid when processed at the head of a line during the STANDARD MODE.
- The command will be ignored in PAGE MODE.
- During macro definition, if this command is processed, the macro definition is suspended, and the command starts being processed.
- Printer will reset its hardware after finishing test printing. Therefore, the printer makes download characters, bit map images and macros undefined, clears the reception buffer/print buffer, and returns the various settings to defaults. At this time, the DIP switches are read again.
- Paper cutting is performed at the end of test printing.
- Printer will be BUSY when the processing of the command starts.

GS / m

[Function] Printing the downloaded bit image

[Code] <1D>H<2F>H<m>

[Range] 0 ≦ m ≦ 3

48 ≦ m ≦ 51

[Outline] Prints downloaded bit image in a mode specified by "m".

Modes that can be selected by "m" are shown below.

m	Mode Name	Dot Density in Vertical Direction	Dot Density in Horizontal Direction
0,48	NORMAL MODE	203 DPI	203 DPI
1,49	DOUBLE WIDTH MODE	203 DPI	101 DPI
2,50	DOUBLE HEIGHT MODE	101 DPI	203 DPI
3,51	QUADRUPLE SIZE MODE	101 DPI	101 DPI

[Caution]

- When data exist in the print buffer, this command is ignored.
- When a downloaded bit image has not been defined, this command is ignored.
- A portion of a downloaded bit image exceeding one line length is not printed.
- A downloaded character and a downloaded bit image cannot be defined simultaneously.

[See Also] GS *

GS :

[Function] Starting/Ending macro definition

[Code] <1D>H<3A>H

[Outline] Specifying starting/ending macro definition.

Reception of this command during macro definition signifies ending the macro definition.

[Caution] Maximum content available for macro definition is 2048 bytes. A portion exceeding 2048 bytes is not defined.

- Even with ESC @ (Initialization of the printer) having been executed, defined content is not cleared. Therefore, it is possible to include ESC @ into the content of macro definition.
- Normal printing operation is carried out even during macro definition.

[Default] The initial value is not defined.

[See Also] GS ^

[Sample Program]

```
LPRINT CHR$(&H1D) + ":";
LPRINT "+———+" + CHR$(&HA);
LPRINT "|       |" + CHR$(&HA);
LPRINT "+———+" + CHR$(&HA);
LPRINT CHR$(&H1D) + ":";
LPRINT CHR$(&H1D) + "^";
LPRINT CHR$(2) + CHR$(10);
END
```

[Print Results]

```
+------+
|      |
+------+
```

Normal Printing during Macro Definition

```
+------+
|      |
+------+
+------+
|      |
+------+
```

Printing during Macro Execution

GS B n

[Function] Specifying/Canceling the black/white inverted printing

[Code] <1D>H<42>H<n>

[Range] 0 ≦ n ≦ 255

[Outline] This command specifies or cancels the black/white inverted printing.

- "n" is valid only for the lowest bit (n0).
- Control by the lowest bit (n0) is shown as follows:

n0	Function
0	The black/white inverted printing is canceled.
1	The black/white inverted printing is specified.

[Caution]

- Number "n" is only valid in the lowest bit.
- The black/white inversion works on internal and downloaded characters.
- The black/white inversion works also on the right spacing of characters defined by ESC SP.
- This command does not affect the bit image, downloaded bit image, bar code, HRI characters, or the skip area specified by HT, ESC $, or ESC \.
- This command does not affect the space between lines.
- Black/white inversion specification takes precedence over underline specification. Underline printing specified is, therefore, nullified if black/white inversion is specified; the underline setting, however, remains unchanged.

[Default] n = 0

GS H n

[Function] Selecting of printing position of HRI characters

[Code] <1D>H<48>H<n>

[Range] 0 ≦ n ≦ 3

48 ≦ n ≦ 51

[Outline] Selecting printing position of HRI characters in printing bar codes.

- "n" means the followings.

n	Printing Position
0,48	No printing
1,49	Above the bar code
2,50	Below the bar code
3,51	Both above and below the bar code

[Caution]

- The HRI characters refer to the bar code-turned characters so that you can read them.
- The HRI characters are printed in the font selected with GS f.
- Specify before the GS k command.

[Default] n = 0

[See Also] GS f, GS k

[Sample Program]

```
LPRINT CHR$(&H1B) + "3" + CHR$(5);
LPRINT CHR$(&H1D) + "h" + CHR$(50);
LPRINT CHR$(&H1D) + "H" + CHR$(0);
GOSUB BC
LPRINT CHR$(&H1D) + "H" + CHR$(1);
GOSUB BC
LPRINT CHR$(&H1D) + "H" + CHR$(2);
GOSUB BC
LPRINT CHR$(&H1D) + "H" + CHR$(3);
GOSUB BC
END
BC:
LPRINT CHR$(&H1D) + "k";
LPRINT CHR$(4);
LPRINT "12" + CHR$(0);
LPRINT CHR$(&HA);
RETURN
```

[Print Results]

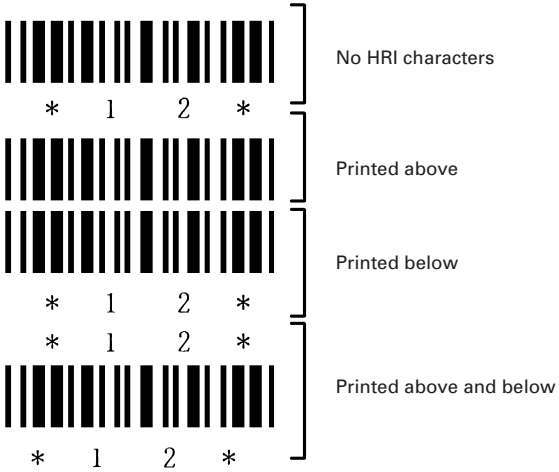

GS I n

[Function] Sending the printer ID

[Code] <1D>H<49>H<n>

[Range] 1 ≦ n ≦ 4 , 49 ≦ n ≦ 52

[Outline] Sends the specified printer ID.

n	Type of printer ID	Specification	Value (Hex.)
1,49	Model ID	CBM1000	30
2,50	Type ID	Refer to table “Type ID” below	
3,51	ROM version ID	As per ROM version	
4,52	Label Length	Depends on label sheet (mm)	

Type ID If n=2, 50 is specified:

Bit	Meaning	Hex.	Decimal
0	Equipped for 2 byte code support	01	1
1	Equipped with autocutter	02	2
2	Thermosensitive paper Label	—	—
	Label paper(when "Label" is selected)	—	—
3	Undefined	—	—
4	Unused	00	0
5	Undefined	—	—
6	Undefined	—	—
7	Unused	00	0

n = 4, 52 specified (only for label specs)
The label length and label gap currently used are returned in 4-byte code.
All fractional parts in millimeters are rounded off.
Byte 1 + Byte 2 x 256 = Label length (between black mark paper)①
Byte 3 + Byte 4 x 256 = Label gap (black mark paper length)②

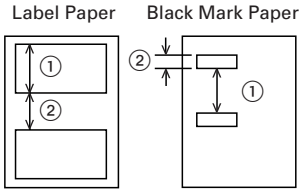

[Caution]

- Under DTR/DSR control, the printer sends the printer ID after verifying that the host is ready to receive. If the host is not ready to receive, the printer waits for the host to become ready to receive.
- Under XON/XOFF control, the printer sends the printer ID without checking whether the host is ready to receive or busy.
- Because this command is executed when data is mapped in the receive buffer, there may be a delay between command receiving and printer ID sending depending on the condition of the receive buffer.
- If ASB (Automatic Status Back) is enabled by GS a, the host must discriminate between the printer ID due to this command and the status due to ASB.

GS L nL nH

[Function] Setting the left margin

[Code] <1D>H<4C>H<nL><nH>

[Range] 0 ≦ nL ≦ 255

0 ≦ nH ≦ 255

[Outline] This command sets the left margin specified by nL and nH. The value of the left margin is [(nL + nH × 256) × basic calculation pitch] inches.

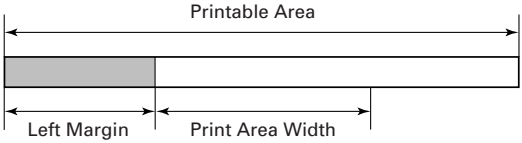

[Caution]

- This command only works when it is entered at the beginning of a line.
- When PAGE MODE is selected, this command only executes the internal flagging of the printer.
- The setting of this command does not affect PAGE MODE.
- The maximum settable left margin is equal to the horizontal printable area. A setting greater than this maximum is trimmed to the maximum.
- The basic calculation pitch is defined by GS P. Once defined, the left margin is not changed if the basic calculation pitch is changed by GS P.
- The left margin is calculated with the horizontal basic calculation pitch (x) set by GS P. A fraction resulting from the calculation is corrected with the minimum pitch of the mechanism, and the remainder is omitted.
- When mapping character data, if the print area specified is not wide enough to accommodate one character of the current font, only the line for that character data is handled as follows:
  (1) The print area is extended toward the right to be equivalent to one character of the current font, but not wider than the printable area.
  (2) If an area for one character cannot be provided as a result of step (1), the print area is extended toward the left. (So, the left margin is decreased.)

- When mapping non-character data (Bit image, downloaded bit image, or bar code), if the print area specified is narrower than 9-bits, only the line for that data is handled as follows:

  (1) The print area is extended toward the left (So, the left margin is decreased) until it is 9-dot wide, but not wider than the printable area.

[Default] nL = 0, nH = 0

[See Also] GS P, GS W

GS P x y

[Function] Specifying the basic calculation pitch

[Code] <1D>H<50>H<x><y>

[Range] 0 ≦ x ≦ 255

0 ≦ y ≦ 255

[Outline] This command sets the horizontal basic calculation pitch to approx. 25.4/x mm (1/x inches), and the vertical basic calculation pitch to approx. 25.4/y mm (1/y inches).

- If x = 0, the horizontal basic calculation pitch is reverted to the default value.
- If y = 0, the vertical basic calculation pitch is reverted to the default value.

[Caution]

- The horizontal direction is defined as the direction perpendicular to the paper feed, and the vertical direction is defined as the paper feed direction.
- In STANDARD MODE, the following parameters are used regardless of the character orientation (e.g. inverted or 90°-right-turned).

  (1) Commands using x: ESC SP, ESC $, ESC \, GS L, GS W

  (2) Commands using y: ESC 3, ESC J
- In PAGE MODE, the parameters used depend on the character orientation, as follows:

  (1) If the start point specified by ESC T is the top left or bottom right (The characters are mapped in the direction perpendicular to the paper feed):

  - Commands using x: ESC SP, ESC $, ESC W, ESC \
  - Commands using y: ESC 3, ESC J, ESC W, GS $,GS \

  (2) If the start point specified by ESC T is the top right or bottom left (The characters are mapped in the paper feed direction):

  - Commands using x: ESC 3, ESC J, ESC W, GS $,GS \
  - Commands using y: ESC SP, ESC $, ESC W, ESC \
  - This command does not affect any other values that are already set.
  - If calculations made in combination with another command generate fractions, the fractions are corrected with the minimum pitch of the mechanism, and the remainder is omitted.

[Default] x = 203, y = 360

[See Also] "PAGE MODE" in APPENDIX 1

ESC SP, ESC $, ESC 3, ESC J, ESC W, ESC \, GS $, GS L, GS W, GS \

GS V m ..... (1)
GS V m n ..... (2) (Only for Thermal Paper)

[Function] Cutting the paper

[Code] (1) <1D>H<56>H<m>

(2) <1D>H<56>H<m><n>

[Range] (1) m = 1, m = 49

(2) m = 66

0 ≦ n ≦ 255

[Outline] Performs the specified paper cutting.

m	Function
1,49	Partial cut (Leaving a bridge area uncut)
66	Paper feed by "cut position + {n × basic calculation pitch}"and partial cut (Leaving a bridge area uncut)

[Caution]

- This command is ignored if "Label" is chosen for paper type.
- In STANDARD MODE, this command only works when it is entered at the beginning of a line.

For (1):

- A partial cut (Leaving a bridge area uncut) is executed.

For (2):

- If n = 0, the paper is fed to the cut position, and then cut. If n ≠ 0, the paper is fed by "n × basic calculation pitch" inches past the cut position, and then cut.
- The basic calculation pitch is set by GS P.

  The paper feed amount is calculated with the vertical basic calculation pitch (y).

  A fraction resulting from the calculation is corrected with the minimum pitch of the mechanism, and the remainder is omitted.

GS W nL nH

[Function] Setting the print area width

[Code] <1D>H<57>H<nL><nH>

[Range] 0 ≦ nL ≦ 255

0 ≦ nH ≦ 255

[Outline] Sets the print area width specified by nL and nH.

- The print area width will be [(nL + nH × 256) × basic calculation pitch] inches.

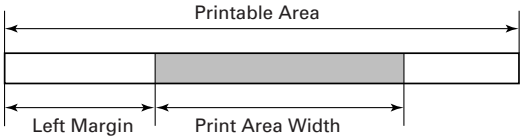

[Caution]

- This command only works when it is entered at the beginning of a line.
- When PAGE MODE is selected, this command only executes the internal flagging of the printer.
- The setting of this command does not affect PAGE MODE.
- If the value entered with this command exceeds the printable area for one line, the entire area except the left margin is set as the print area width.
- The basic calculation pitches are defined by GS P. Once defined, the print area width is not changed if the basic calculation pitch is changed by GS P.
- The print area width is calculated with the horizontal basic calculation pitch (x) defined by GS P. A fraction resulting from the calculation is corrected with the minimum pitch of the mechanism, and the remainder is omitted.
- If the first character to be mapped at the beginning of a line has a width (Including the right spacing) greater than the print area width, only that line is handled as follows:

  (1) The print area is extended toward the right to accommodate the first character, but not wider than the printable area.

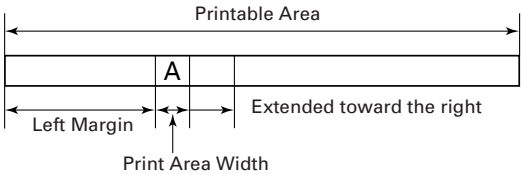

(2) If a sufficient area cannot be provided as a result of step (1), the print area is extended toward the left (So, the left margin is decreased).

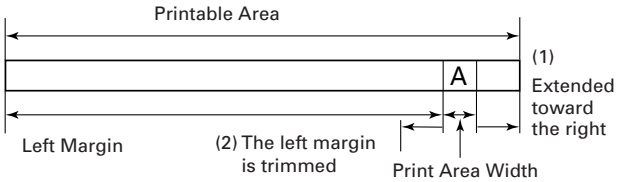

(3) If a sufficient area cannot be provided as a result of step (2), the right spacing is trimmed.

- When mapping a bit image (Or downloaded bit image), if the print area is narrower than the minimum width of the bit image (Two dots for single density, or one dot for double density), only the line for that image is handled as follows:

(1) The print area is extended toward the left (So, the left margin is decreased) until it is equal to the minimum width of the image, but not wider than the printable area.

[Default] nL=64, nH=2 (When 58mm wide paper is used: nL=176, nH=1)

Since the default value varies depending on the number of columns, refer to "Defing the print area in PAGE MODE; ESC W" on page 83, for more information.

[See Also] GS L, GS P

GS \ nL nH

[Function] Specifying the relative vertical position of a character in PAGE MODE

[Code] <1D>H<5C>H<nL><nH>

[Range] 0 ≦ nL ≦ 255

0 ≦ nH ≦ 255

[Outline] This command is used in PAGE MODE to specify the vertical position of a character in the data mapping start position, in a relative position with respect to the current position. The next data mapping start position will be at a point [(nL + nH × 256)× basic calculation pitch] inches away from the current position.

[Caution]

- This command is ignored when PAGE MODE is not selected.
- If a new position is specified for a character located beneath the current position, it should be specified as positive (+). If it is above the current position, it should be negative (-).
- A negative value is the complement of 65536. For example, to move the position by N pitches up, specify it as:

  nL + nH × 256 = 65536 - N
- The specification of a relative position outside the specified print area is ignored.
- Depending on the start point specified by ESC T, this command acts as follows:

  (1) If the start point is the top left or bottom right, the command specifies the relative position in the paper feed direction (The character's top-bottom direction) using the vertical basic calculation pitch (y).

  (2) If the start point is the top right or bottom left, the command specifies the relative position in the direction perpendicular to the paper feed (The character's top-bottom direction) using the horizontal basic calculation pitch (x).
- The basic calculation pitch is set by GS P.
- Fractions resulting from calculations are corrected with the minimum pitch of the mechanism, and the remainder is omitted.

GS ^ n1 n2 n3

[Function] Executing the macro

[Code] <1D>H<5E>H<n1><n2><n3>

[Range] 0 ≦ n1 ≦ 255

0 ≦ n2 ≦ 255

0 ≦ n3 ≦ 1

[Outline] Executing contents defined in macro.

n1 : The number of times of macro execution

n2 : Waiting time on macro execution

Waiting time of n2 × 100 msec is given for every execution.

n3 : Macro execution mode

n3=0 Continuous execution:

The Macro is executed "n1" times continuously at the time interval specified by "n2".

n3=1 Execution by FEED Switch:

After waiting for the time specified by "n2", the ARARM LED flickers and the FEED switch is waiting to be pressed. When it is pressed, the macro is executed once. This action is repeated "n1" times.

[Caution]

- When this command is received while in macro definition, suspension of macro definition is indicated. At this time, the defined content is cleared.
- No execution takes place when the macro is held undefined or n1=0.
- While in macro execution with n3=1, paper feed with the FEED switch is not available.

[Default] The initial value is not defined.

[See Also] GS :

[Sample Program] Refer to Sample Program and Print Results for GS: on page 101.

GS a n

[Function] Enabling/Disabling ASB (Automatic Status Back)

[Code] <1D>H<61>H<n>

[Range] 0 ≦ n ≦ 255

[Outline] This command selects the status item to be addressed by ASB (Automatic Status Back.)

Bit	Status item addressed by ASB	Hex.	Decimal
0	Status of pin 3 of Drawer Kick-Out Connector = disabled	00	0
	Status of pin 3 of Drawer Kick-Out Connector = enabled	01	1
1	Online/offline status = disabled	00	0
	Online/offline status = enabled	02	2
2	Error status = disabled	00	0
	Error status = enabled	04	4
3	Continuous Paper Sensor = disabled	00	0
	Continuous Paper Sensor = enabled	08	8
4	Undefined	—	—
5	Undefined	—	—
6	Undefined	—	—
7	Undefined	—	—

[Caution]

- If any status item is enabled, the status is sent to the host when this command is executed. After that time on, the status is sent each time an enabled status item changes. Because each status item represents the current condition, status items disabled for ASB may also have changed.
- The ASB function is disabled if all status items are disabled.
- If the ASB function is enabled by default, the host receives the status the first time the printer gets ready for communication after it is turned on.
- The printer sends 4 bytes of status shown in the tables below, without checking whether the host is ready to receive or busy. The 4 bytes of status is a continuous string except for XOFF code.
- Because this command is executed when data is mapped in the receive buffer, there may be a delay between command receiving and status sending depending on the condition of the receive buffer.
- Even if the printer is excluded from the selection of peripheral equipment (ESC =), the 4 bytes of status is sent to the host whenever status changes.
- When DLE EOT, GS I, or GS r is used, the host must discriminate between the status specified by these commands and the status due to ASB.

(1) 1st byte (Printer information)

Bit	Status	Hex.	Decimal
0	Unused	00	0
1	Unused	00	0
2	Status of pin 3 of Drawer Kick-Out Connector = “L”	00	0
	Status of pin 3 of Drawer Kick-Out Connector = “H”	04	4
3	Online status	00	0
	Offline status	08	8
4	Unused	10	16
5	Cover closed	00	0
	Cover open	20	32
6	Not in paper feed state triggered by FEED switch	00	0
	In paper feed state triggered by FEED switch	40	64
7	Unused	00	0

(2) 2nd byte (Error occurrence information)

Bit	Status	Hex.	Decimal
0	Undefined	—	—
1	Undefined	—	—
2	No label detection error occurred (only when "Label" is selected).	00	0
	A label detection error occurred (only when "Label" is selected).	04	4
3	Auto cutter error not occurred	00	0
	Auto cutter error occurred	08	8
4	Unused	00	0
5	Unrecoverable error not occurred	00	0
	Unrecoverable error occurred	20	32
6	Auto recovery error not occurred	00	0
	Auto recovery error occurred	40	64
7	Unused	00	0

(3) 3rd byte (Paper Sensor information)

Bit	Status	Hex.	Decimal
0,1	Paper found by Paper Near-end Sensor	00	0
	Paper not found by Paper Near-end Sensor	03	3
2,3	Paper found by Paper end Sensor	00	0
	Paper not found by Paper end Sensor	0C	12
4	Unused	00	0
5	Undefined	—	—
6	Undefined	—	—
7	Unused	00	0

The bit0 and 1 are fixed to ‘0’ when using the label paper.

(4) 4th byte (Paper Sensor information)

Bit	Status	Hex	Decimal
0	Undefined	—	—
1	Undefined	—	—
2	Undefined	—	—
3	Undefined	—	—
4	Unused	00	0
5	Undefined	—	—
6	Undefined	—	—
7	Unused	00	0

[Default]

DIP Switch 2-6 OFF: n = 0

DIP Switch 2-6 ON: n = 2

[See Also]

DLE EOT, GS r, "IDENTIFICATION OF SEND STATUS" in APPENDIX 3

GS f n

[Function] Selecting the font of HRI characters

[Code] <1D>H<66>H<n>

[Range] n = 0, 1

[Outline] Selecting the font of HRI characters in printing bar code.

The type of font can be selected with "n" as follows:

n	Font
0, 48	Font A (12 × 24)
1, 49	Font B (9 × 24)

The HRI characters refer to the bar code-turned characters so that you can read them.

[Caution] The HRI characters are printed at the position specified with GS H.

[Default] n = 0

[See Also] GS H

[Sample Program]

```
LPRINT CHR$(&H1D) + "h" + CHR$(50);
LPRINT CHR$(&H1D) + "H" + CHR$(2);
LPRINT CHR$(&H1D) + "f" + CHR$(0);
GOSUB BC
LPRINT CHR$(&H1D) + "f" + CHR$(1);
GOSUB BC
END
BC:
LPRINT CHR$(&H1D) + "k";
LPRINT CHR$(4);
LPRINT "12" + CHR$(0);
LPRINT CHR$(&HA);
RETURN
```

[Print Results]

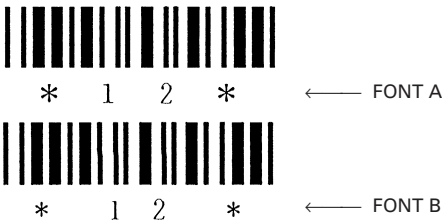

GS h n

[Function]	Specifying the height of the bar code
[Code]	<1D>H<68>H<n>
[Range]	1 ≦ n ≦ 255
[Outline]	Selecting bar code height. “n” denotes the number of dots in the vertical direction.
[Default]	n = 162
[Sample Program]	Refer to Sample Program and Print Results for GS w on page 131.

GS k m [d1 ..... dk] NUL
GS k m n [d1 ..... dn]

[Function] Printing the bar code

[Code] (1) <1D>H<6B>H<m> [d1.....dk] NUL

(2) <1D>H<6B>H<m><n> [d1....dn]

[Range] (1) 0 ≦ m ≦ 6 The definitions of "k" and "d" vary with the bar code system.

(2) 65 ≦ m ≦ 73 The definitions of "n" and "d" vary with the bar code system.

[Outline] Selects a bar code system and prints the bar code.

For (1):

m	Bar code system	Range of "n"	Range of "d"
0	UPC-A	11 ≦ k ≦ 12	48 ≦ d ≦ 57
1	UPC-E	11 ≦ k ≦ 12	48 ≦ d ≦ 57
2	JAN13 (EAN)	12 ≦ k ≦ 13	48 ≦ d ≦ 57
3	JAN8 (EAN)	7 ≦ k ≦ 8	48 ≦ d ≦ 57
4	CODE39	1 ≦ k	48 ≦ d ≦ 57, 65 ≦ d ≦ 90 32, 36, 37, 43, 45, 46, 47
5	ITF	1 ≦ k (Must be an even number)	48 ≦ d ≦ 57
6	CODABAR	1 ≦ k	48 ≦ d ≦ 57, 65 ≦ d ≦ 68 36, 43, 45, 46, 47, 58

For (2):

m	Bar code system	Range of "n"	Range of "d"
65	UPC-A	11 ≦ n ≦ 12	48 ≦ d ≦ 57
66	UPC-E	11 ≦ n ≦ 12	48 ≦ d ≦ 57
67	JAN13 (EAN)	12 ≦ n ≦ 13	48 ≦ d ≦ 57
68	JAN8 (EAN)	7 ≦ n ≦ 8	48 ≦ d ≦ 57
69	CODE39	1 ≦ n ≦ 255	48 ≦ d ≦ 57, 65 ≦ d ≦ 90 32, 36, 37, 43, 45, 46, 47
70	ITF	1 ≦ n ≦ 255 (An even number)	48 ≦ d ≦ 57
71	CODABAR	1 ≦ n ≦ 255	48 ≦ d ≦ 57, 65 ≦ d ≦ 68 36, 43, 45, 46, 47, 58
72	CODE93	1 ≦ n ≦ 255	0 ≦ d ≦ 127
73	CODE128	2 ≦ n ≦ 255	0 ≦ d ≦ 127

[Caution]

For (1):

- This command ends with a NUL code.
- For UPC-A or UPC-E, the bar code is printed when 12 bytes of bar code data have been entered, and the subsequent data is handled as normal data.
- For JAN13, the bar code is printed when 13 bytes of bar code data have been entered, and the subsequent data is handled as normal data.
- For JAN8, the bar code is printed when 8 bytes of bar code data have been entered, and the subsequent data is handled as normal data.
- The data of ITF bar code must have an even number of columns. Should the data have an odd number of columns, the last column is ignored.

For (2):

- Numeral "n" indicates the number of data items, and the subsequent "n" bytes of data are handled as bar code data.
- If "n" is out of the range, the processing of the command is aborted, and the subsequent data is handled as normal data.

For STANDARD MODE:

- If "d" is out of the range, only a paper feed is executed, and the subsequent data is handled as normal data.
- If the bar code is wider than the print area for one line, the bar code is not printed, but only a paper feed is executed.
- The amount of paper feed corresponds to the height of the bar code (Including the HRI characters if HRI character printing is specified), irrespective of the line feed width set by a command such as ESC 2 or ESC 3.
- This command only works if no data exists in the print buffer. If any data exists in the print buffer, the data subsequent to "m" is handled as normal data.
- After the bar code is printed, the beginning of the line is taken as the start position for the next print.
- This command is not affected by any print modes (Emphasis, double strike, underline, and character size), except for the inverted character mode.

For PAGE MODE:

- This command only maps the bar code, without performing a printout. After the bar code is mapped, the dot next to the last data item of the bar code is taken as the start position for the next data mapping.
- If “d” is out of the range, the processing of the command is aborted, and the subsequent data is handled as normal data. In this case, the data mapping start position does not move.
- If the bar code is wider than the print area, the bar code is not printed, but the data mapping start position is moved to the left end of the non-print area.

[Default] The initial value is not defined.

[Description of Bar Codes]

<For print examples, refer to page 123.>

UPC-A This bar code, consisting of numerals only, has a fixed length of 12 columns; a 11-column number entered from the host or application software plus a check digit (12th column) automatically calculated inside the printer. If the 12th-column numeral is sent from the host, the entire bar code will be printed as it is.

UPC-E This bar code, consisting of numerals only, has a fixed length of 8 columns; the first number system character is "0" stationary. A 12-column numeral entered from the host or application software is compressed to 8 columns with a check digit attached and then is printed. The 12th-column check digit is automatically calculated inside the printer. If it is and sent from the host, the entire bar code will be printed, compressed to 8 columns.

JAN-13(EAN) This bar code, consisting of numerals only, has a fixed length of 13 columns; a 12-column number entered from the host or application software plus a check digit (13th column) automatically calculated inside the printer. If the 13th-column numeral is sent from the host, the entire bar code will be printed as it is.

JAN-8(EAN) This bar code, consisting of numerals only, has a fixed length of 8 columns; a 7-column number entered from the host or application software plus a check digit (8th column) automatically calculated inside the printer. If the 8th-column numeral is sent from the host, the entire bar code will be printed as it is.

CODE39 This bar code, consisting of upper-case alphabetic characters and numerals, has a variable length of columns. The start/stop code "∗" is automatically added by the printer. The available characters include space and "$ % + – · / 0 1 2 3 4 5 6 7 8 9" and upper-case alphabetic characters.

ITF This bar code, consisting of only numerals, has a variable length of even-number columns. If a code of odd-number columns is sent, the bar code will not be printed.

CODABAR (NW-7)

This bar code, consisting of alphanumerics, has a variable length of columns. Available characters include “0 1 2 3 4 5 6 7 8 9 A B C D $ + – . / :”. A start/stop code is required; any one of A, B, C, and D is used.

CODE93

This bar code, consisting of alphanumeric and control characters, has a variable length of columns. The HRI character string is preceded and followed by a “■” character. HRI characters for control characters (00H - 1FH, and 7FH) are each printed as a combination of a “■” character and an alphabetic character.

Control character		HRI character	Control character		HRI character
ASCII	Hex.		ASCII	Hex.	
NUL	00	■ U	DLE	10	■ P
SOH	01	■ A	DC1	11	■ Q
STX	02	■ B	DC2	12	■ R
ETX	03	■ C	DC3	13	■ S
EOT	04	■ D	DC4	14	■ T
ENQ	05	■ E	NAK	15	■ U
ACK	06	■ F	SYN	16	■ V
BEL	07	■ G	ETB	17	■ W
BS	08	■ H	CAN	18	■ X
HT	09	■ I	EM	19	■ Y
LF	0A	■ J	SUB	1A	■ Z
VT	0B	■ K	ESC	1B	■ A
FF	0C	■ L	FS	1C	■ B
CR	0D	■ M	GS	1D	■ C
SO	0E	■ N	RS	1E	■ D
SI	0F	■ 0	US	1F	■ E
			DEL	7F	■ T

CODE128 This bar code consists of 103 bar code characters and three code sets, enabling 128 ASCII code characters to be printed. It has a variable length of columns.

- Code set A ASCII characters 00H - 5FH can be represented.
- Code set B ASCII characters 20H - 7FH can be represented.
- Code set C Two-digit numbers 00 - 99 can each be represented by one character.

In addition to the above characters, special characters are available:

- Shift character (SHIFT)

When used in code set A, one character next to a Shift character is treated as a character of code set B. When used in code set B, one character next to a Shift character is treated as a character of code set A. The Shift character cannot be used in code set C.

- Code set select characters (CODE A, CODE B, CODE C):

The code set following a code set select character is switched to code set A, B, or C.

- Function characters (FNC1, FNC2, FNC3, FNC4):

How the function characters are used depends on each application. In code set C, only FNC1 is available.

When sending print data, note these points:

(1) Each string of bar code data must begin with a code set select character (CODE A, CODE B, or CODE C), which selects the first code set to use.

(2) Every special character is specified by a combination of two characters: a brace “{” followed by one character. A brace “{” itself is sent twice consecutively.

Special characters

Hex.	ASCII	Code set A	Code set B	Code set C
7B53	{ S	SHIFT	SHIFT	–N/A
7B41	{ A	–N/A	CODE A	CODE A
7B42	{ B	CODE B	–N/A	CODE B
7B43	{ C	CODE C	CODE C	–N/A
7B31	{ 1	FNC1	FNC1	FNC1
7B32	{ 2	FNC2	FNC2	–N/A
7B33	{ 3	FNC3	FNC3	–N/A
7B34	{ 4	FNC4	FNC4	–N/A
7B7B	{ {	‘ { ‘	‘ { ‘	‘ { ‘

<Example>

To print “No.” in code set B, followed by “123456” in code set C, send the following data string:

GS k <73><10><7Bh 42h> “No.” <7Bh 43h><12><34><56>

- If the printer finds a string of bar code data that does not begin with a code set select character, it immediately aborts the command processing and handles the subsequent data as normal data.
- If the printer received a character that is not available in the currently selected code set, it immediately aborts the command processing and handles the subsequent data as normal data.
- An HRI character corresponding to either a Shift character or a code select character is not printed. An HRI character for either a function character or a control character is treated as a space character.

[Sample Program]

```
LPRINT CHR$(&H1D) + “H” + CHR$(2);
LPRINT CHR$(&H1D) + “k”;
LPRINT CHR$(4);
LPRINT “123” + CHR$(0);
END
```

[Print Results]

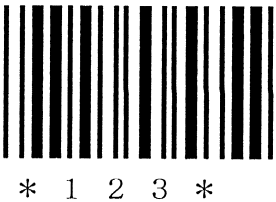

When the data “123” is printed with the code 39

[Description of Bar Codes]

UPC-A, UPC-E, JAN-13 (EAN), JAN-8 (EAN), CODE39, ITF, CODABAR, CODE93, CODE128

Type	Print Sample	Outline of Symbol
UPC-A	123456 789012	12-column fixed-length bar code consisting of numerals only.
UPC-E	123643	8-column fixed-length bar code consisting of numerals only. Abbreviated version of UPC-A.
JAN-13	1234567 890128	13-column fixed-length bar code consisting of numerals only.
JAN-8	1234 5670	8-column fixed-length bar code consisting of numerals only.
CODE39	* 1 2 3 4 5 *	Variable-length bar code consisting of alphabetic characters and numerals. The start/stop code “*”is automatically added.
ITF	1 2 3 4 5 6 7 8 9 0	Even-column variable-length bar code consisting of numerals only.
CODABAR (NW-7)	A 1 2 3 4 5 6 A	Variable-length bar code consisting of alphanumeric characters. Any one of A, B, C, and D is required as the start/stop code.
CODE93	▫Code▪M931234567890 1▫	Variable-length bar code consisting of alphanumeric and control characters.
CODE128	ABCD12345	Variable-length bar code consisting of any of 128 ASCII code characters.

Printing is done according to bar code type, number of print columns, bar code height, width (Magnification), availability of HRI character, and bar code data.

GS r n

[Function] Sending status

[Code] <1D>H<72>H<n>

[Range] 1 ≦ n ≦ 2

49 ≦ n ≦ 50

[Outline] Sends the specified status to the host.

n	Function
1,49	Sends the paper Sensor status.
2,50	Sends the Drawer Kick-out Connector status.

[Caution]

- When the serial interface is used:

  For DTR/DSR control:
  The printer sends the status after verifying that the host is ready to receive. If the host is not ready to receive, the printer waits for the host to become ready to receive.

  For XON/XOFF control:
  The printer sends the status without checking whether the host is ready to receive or busy.

- Because this command is executed when data is mapped in the receive buffer, there may be a delay between receiving the command and sending the status depending on the condition of the receive buffer.
- If ASB (Automatic Status Back) is enabled by GS a, the host must discriminate between the status due to this command and the status due to ASB.
- Paper Sensor status (n = 1, 49)

Bit	Status	Hex.	Decimal
0,1	Paper found by Paper Near-end Sensor	00	0
	Paper not found by Paper Near-end Sensor	03	3
2,3	Paper found by Paper end Sensor	00	0
	Paper not found by Paper end Sensor	(0C)	(12)
4	Unused	00	0
5	Undefined	—	—
6	Undefined	—	—
7	Unused	00	0

Bits 2, 3: Whenever the Paper end Sensor detects a “paper out” state, the printer goes offline, and the command is not executed. The printer, therefore, never sends a status where bit 2 = “1” or bit 3 = “1”.

Bits 0, 1: These bits are fixed to ‘0’ when using the label paper.

• Drawer Kick-Out Connector status (n = 2, 50)

Bit	Status	Hex.	Decimal
0	Status of pin 3 of Drawer Kick Connector = "L"	00	0
	Status of pin 3 of Drawer Kick Connector = "H"	01	1
1	Undefined	—	—
2	Undefined	—	—
3	Undefined	—	—
4	Unused	00	0
5	Undefined	—	—
6	Undefined	—	—
7	Unused	00	0

[See Also] DLE EOT, GS a, "IDENTIFICATION OF SEND STATUS" in APPENDIX 3

GS v 0 m xL xH yL yH d1...dk

[Function] Printing of raster bit image

[Code] <1D>H<76>H<30>H<m><xL><xH><yL><yH> [<d>] k

[Range] 0 ≦ m ≦ 3, 48 ≦ m ≦ 51, 0 ≦ xL ≦ 255, 0 ≦ xH ≦ 255,
0 ≦ yL ≦ 255, 0 ≦ yH ≦ 8, 0 ≦ d ≦ 255,
k=(xL+xH × 256) × (yL+yH × 256), however, k≠0

[Outline] Prints raster bit images in mode "m".

m	Mode Name	Dot Density in Vertical Direction	Dot Density in Horizontal Direction
0,48	NORMAL MODE	203 DPI	203 DPI
1,49	DOUBLE WIDTH MODE	203 DPI	101 DPI
2,50	DOUBLE HEIGHT MODE	101 DPI	203 DPI
3,51	QUADRUPLE SIZE MODE	101 DPI	101 DPI

- xL, xH specify the number of data in horizontal direction of the bit image to (xL+xH × 256) bytes.
- yL, yH specify the number of data in vertical direction of the bit image to (yL+yH × 256) bytes.

[Details]

- In STANDARD MODE, this command is valid only when there is no print data in the print buffer.
- Any of the print modes (Character size, emphasis, double strike, inverting, underlining, back-to-white reversing, etc.) does not affect the raster bit image.
- If the print area specified by GS L and GS W is narrower than a minimum width, the print area for that line only is extended to the minimum width. The minimum width is one dot in NORMAL MODE (m=0, 48) and DOUBLE HEIGHT MODE (m=2, 50), and 2 dot in DOUBLE WIDTH MODE (m=1, 49) and QUADRUPLE SIZE MODE (m=3, 51).
- Any part of data that is out of the print area is only read and discarded in units of dot.
- The print start position can arbitrarily be specified with HT (Horizontal tab), ESC $ (Specifying absolute position), ESC \ (Specifying relative positions), and GS L (Setting left margins). Note that if the print start position is not a multiple of 8, the printing speed may decrease.
- The setting of ESC a (Aligning characters) are also valid for the raster bit image.

- If this command is executed during macro definition, the macro definition is suspended, and the processing of the command starts. The macro is left undefined.
- “d” denotes defined data. Dots to be printed are specified as “1”, and those not to be printed as “0”.

[Example]

When xL+xH × 256= 64

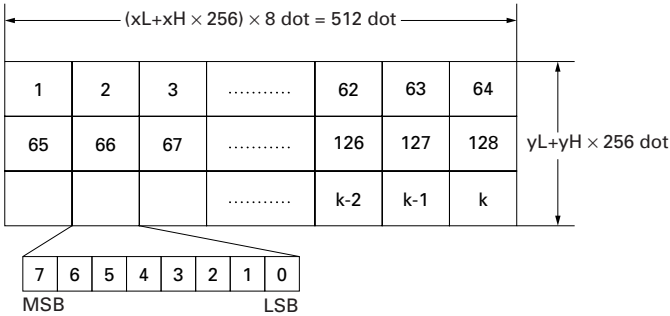

GS w n

[Function] Specifying the horizontal size (Magnification) of bar code

[Code] <1D>H<77>H<n>

[Range] 2 ≦ n ≦ 6

[Outline] Selecting bar code width.
"n" denotes the number of dots in fine element width.

[Default] n = 3

[Sample Program]

```
LPRINT CHR$(&H1D) + "h" + CHR$(30);
LPRINT CHR$(&H1D) + "w" + CHR$(2);
GOSUB BC
LPRINT CHR$(&H1D) + "h" + CHR$(50);
LPRINT CHR$(&H1D) + "w" + CHR$(3);
GOSUB BC
LPRINT CHR$(&H1D) + "h" + CHR$(80);
LPRINT CHR$(&H1D) + "w" + CHR$(4);
GOSUB BC
END
BC:
LPRINT CHR$(&H1D) + "k";
LPRINT CHR$(4);
LPRINT "12" + CHR$(0);
RETURN
```

[Print Results]

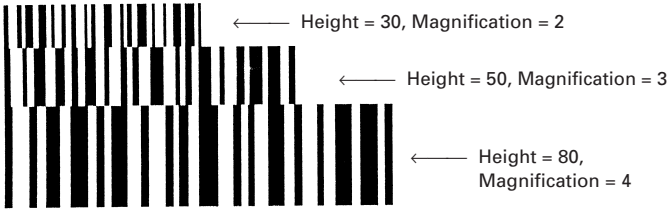

FS g3 m a1 a2 a3 a4 nL nH d1...dk

[Function] Writing data into the download user NV memory

[Code] <1C>H<67>H<33>H<m>H<a1>H<a2>H<a3>H<a4>H
<nL>H<nH>H[<d>]nL+(nH × 256)

[Range] m=0
6000H ≦ (a1+(a2 × 256)+(a3 × 65536)+(a4 × 16777216)) ≦ 7FFFH
Sto rage start address ≦ (nL+(nH × 256)) ≦ 1024
k=(nL+(nH × 256))

[Outline] This command loads data into the download user NV memory.

- "m" is fixed at 0.
- a1, a2, a3, a4 set the data storage start address at (a1+(a2 × 256)+(a3 × 65536)+(a4 × 16777216)).
- nL, nH sets the number of stored data to (nL+(nH × 256)) bytes.
- "d" denotes the data to be stored.

[Details]

- The download user NV memory refers to a storage area exclusively for character data secured on non-volatile memory.

  Font A: Start address 6000H End address 71FFH (36 bytes for 1 character)

  Font B: Start address 7200H End address 7F7FH (27 bytes for 1 character)
- When the STANDARD MODE is selected, this command is valid only when it is written at the head of the line.
- This command is invalid when PAGE MODE is selected.
- If this command is sent while a macro is being defined, the definition process will be stopped and the execution of this command will start.
- If the argument (m), the storage start address (a1, a2, a3, a4), or the number of stored data (nL, nH) is outside the definition area, this command becomes invalid and the following data will be processed as normal data.
- Date storage processing causes "overwriting" to be executed, thus erasing the data stored already before the storage processing was executed.
- When an error occurs during the writing process, the error will be a "Memory or gate-array R/W error".
- Data in the user NV memory can be read by using the FS g4 command.
- Data in the user NV memory is not initialized by using the ESC @ command, the FS q command or by resetting the printer or turning the power off.

[Caution]

- Because frequent writing in the non-volatile memory can destroy the memory, the writing command (FS g3) should be used less than 10 times a day.
- It may happen that the printer becomes BUSY during the process of writing data into the non-volatile memory while this command is executed. When the printer becomes BUSY, it will stop receiving data. Therefore, sending data from the host (Including real time commands) is prohibited.

[Reference]

FS g4

FS g4 m a1 a2 a3 a4 nL nH

[Function] Reading data from the download user NV memory

[Code] <1C>H<67>H<34>H<m>H<a1>H<a2>H<a3>H<a4>H
<nL>H<nH>H

[Range] m=0
6000H ≦ (a1+(a2 × 256)+(a3 × 65536)+(a4 × 16777216)) ≦ 7FFFH
Write start address +n1+nH × 256 ≦ 8000H
K=(nL+(nH × 256))

[Outline]

- This command reads data from the download user NV memory.
- "m" is fixed at 0.
- a1, a2, a3, a4 set the data sending start address at (a1+(a2 × 256)+(a3 × 65536)+(a4 × 16777216)).
- nL, nH set the number of sent data to (nL+(nH × 256)) bytes.

[Details]

- The download user NV memory refers to a storage area exclusively for character data secured on non-volatile memory.
  Font A: Start address 6000H End address 71FFH (36 bytes for 1 character)
  Font B: Start address 7200H End address 7F7FH (27 bytes for 1 character)
- If the argument (m), the send start address (a1, a2, a3, a4), or the number of sent data (nL, nH) is outside the definition area, this command becomes invalid and the following data will be processed as normal data.
- When the preparation for sending data is completed, the following processes are executed.
  1) The printer state will change from READY to BUSY. If the printer state is already set to BUSY, the printer will do nothing.
  2) (Header + data + NUL) is sent.
  3) The printer state will change from BUSY to READY. At this moment, if the printer state is set to BUSY because of other reasons, it remains in the BUSY state.

  The construction of (Header + data + NUL) is as follows.
  Header: 5FH in hexadecimal = 95 in decimal (1 byte)
  Data: data in download user NV memory ((nL+nH × 256) bytes)
- When the DTR/DSR control is selected, all codes are sent continuously after verifying that the host can receive the data to be sent. If the host cannot receive the data, it will wait until it can be received.

- When the XON/XOFF control is selected, all the codes are sent continuously without verifying that the host can receive the data. Data that has been sent is always continuous except for the XOFF code.
- When parallel interface is used, the size of the buffer for sending data (The buffer that stores all data to be sent except for ASB status) is 99 bytes. Data which exceeds 99 bytes, will be discarded.
- Data can be written into the download user NV memory using the FS g3 command.
- There may be a delay between receiving this command and storing the data depending on the state of the receiving buffer.

[Caution]

- After the header is sent, all data will be sent without verifying whether the host can receive the data or not. Therefore, the available space in the receiving buffer of the host should be more than (The number of sent data+2) in order not to lose data during the execution of this command.
- While data is being sent, real time commands (Commands with a DLE extension) will be ignored. And even if the ASB function is validly selected, ASB status will not be sent while data is in the process of being sent. Therefore, it is not possible to check the change in the printer state by checking its status. The user must pay attention to this.

[Reference]

FS g3

F S p n m

[Function] Printing the download NV bit images

[Code] <1C>H<70>H<n><m>

[Range] 1 ≦ n ≦ 255

0 ≦ m ≦ 3

48 ≦ m ≦ 51

[Outline] This command prints the download NV bit images (n) using a specified mode (m).

m	Mode Name	Dot Density in Vertical Direction	Dot Density in Horizontal Direction
0,48	NORMAL MODE	203 DPI	203 DPI
1,49	DOUBLE WIDTH MODE	203 DPI	101 DPI
2,50	DOUBLE HEIGHT MODE	101 DPI	203 DPI
3,51	QUADRUPLE SIZE MODE	101 DPI	101 DPI

- "n" denotes the number of the download bit image.
- "m" denotes the bit image mode.

[Details]

- The download NV bit image refers to the image that is defined by the FS q command in the non-volatile memory and printed by the FS p command.
- When the specified NV bit image "n" is undefined, this command is invalid.
- When the STANDARD MODE is selected, this command is valid only when there is no data in the print buffer.
- This command is invalid when PAGE MODE is selected.
- Any printing modes except the upside-down printing mode (i.e. emphasis, double strike, underlining, character size, inverted character printing, 90° - right-turned) are not affected.
- When the printing area set by the functions GS L and GS W is not enough for one vertical line of the download NV bit image, the line alone is dealt with as follows. One vertical line of the bit image is 1dot in NORMAL MODE (m = 0, 48) and DOUBLE HEIGHT MODE (m = 2, 50), and it is 2 dots in double WIDTH MODE (m = 1, 49) and QUADRUPLE SIZE MODE. (m = 3, 51)

  1) The printing area is extended to the right side within the limits of the printing area so that one vertical line of the download NV bit image can be printed.

  2) When a sufficient printing area cannot be maintained even after executing (1), the printing area is extended to the left side. (The left margin is reduced.)

- When the size of a bit image exceeds the limits of the printing area, the data within the limits of the printing area will be printed but the parts exceeding the limit will not be printed.
- Regardless of the amount of line feed set with ESC 2 and ESC 3, NORMAL MODE and DOUBLE WIDTH MODE execute a paper feed of (Height n of NV bit image) dots while DOUBLE HEIGHT MODE and QUADRUPLE SIZE MODE execute a paper feed of (Height n of NV bit image × 2) dots.
- At the completion of the bit image printing, the head of the line will be used for the next printing position and normal data processing will take place.

[Related Commands] ESC ＊, FS q, GS / , GS v 0

F S q n [xL xH yL yH d1...dk] 1... [xL xH yL yH d1...dk] n

[Function] Defining the download NV bit image

[Code] <1C>H<71>H<n>H{<xL><xH><yL><yH><d1...dk>}1...

{<xL><xH><yL><yH><d1...dk>}n

[Range] $1 \leqq n \leqq 255$, $0 \leqq xL \leqq 255$,

$0 \leqq xH \leqq 3$ but, $1 \leqq (xL + xH \times 256) \leqq 1023$

$0 \leqq yL \leqq 255$

$0 \leqq yH \leqq 1$ but, $1 \leqq (yL + yH \times 256) \leqq 288$

$0 \leqq d \leqq 255$

$k = (xL + xH \times 256) \times (yL + yH \times 256) \times 8$

Total definition area = 2M bit (256K bytes)

[Outline] This command defines the specified NV bit image.

- "n" denotes the number of bit images to be defined.
- xL and xH denote the horizontal size of one NV bit image as $(xL + xH \times 256) \times 8$ dots.
- yL and yH denote the vertical size of one NV bit image as $(yL + yH \times 256) \times 8$ dots.

[Details]

- Because all the NV bit images previously defined by this command are deleted, it is not possible to redefine any one of the previously defined multiple data. All the data must be resent.
- From the execution of this command until the completion of the hardware reset, any mechanical operation such as opening the cover, initializing the printer head position, or using the paper-feed switch etc.
- The NV bit image refers to a bit image that is defined by the FS q command in the non-volatile memory and printed by the FS p command.
- When the STANDARD MODE is selected, this command is only valid when it is written at the head of a line.
- This command is invalid when PAGE MODE is selected.
- This command becomes valid after the 7 bytes of <FS – yH> are processed as normal values.
- When data which exceeds the remaining capacity of the defined area is specified by xL, xH, yL, yH, outside-defined-area arguments will be processed.
- When outside-defined-area arguments are processed for the first bit image data group, this command becomes invalid.

- If outside-defined-area arguments are processed for the second or subsequent NV bit image data groups, the processing of this command is suspended, and a writing process into the non-volatile memory starts. At this time, the NV bit image being defined becomes invalid (Undefined), but the preceding NV bit images are valid.
- "d" denotes the definition data. Bits which correspond to dots to be printed are represented as 1, and those not to be printed as 0.
- The definition will start from NV bit image number 01H and n-number bit images will be defined in ascending order. Therefore, the first data group [xL xH yL yH d1… dk] becomes NV bit image number 01H, and the last data group [xL xH yL yH d1… dk] becomes NV bit image number 0nH. These numbers of NV bit images coincide with those specified with FS p.
- The definition data of one NV bit image consists of [xL xH yL yH d1… dk]. Therefore, when only one NV bit image is defined, n=1; the data group [xL xH yL yH d1… dk] is manipulated once, and ([Data: (xL + xH × 256) × (yL + yH × 256) × 8] + [header: 4]) bytes of non-volatile memory is used to store it.
- The maximum definition area of this printer is 2M bit (256K byte). Multiple NV bit images can be defined, but bit images of which total size (Bit image data + header) exceeds 2M bit(256K byte) can not be defined.
- The printer state will change to BUSY just before the writing operation into the non-volatile memory begins. Also,for a printer that have a dip switch[BUSY], the printer state will change to BUSY just before the writing operation begins regardless of the state of the dip switch.
- While this command is being executed, it is not possible to send ASB status or to detect the printer status even when the ASB function is selected.
- If this command is sent while a macro is still being defined, the definition process will be stopped and the execution of this command will start.
- NV bit images that are defined already are not initialized by using ESC @ command, or by resetting the printer or turning the power off.
- The command only executes definition of NV bit image, but not start printing. The printing of NV bit image will be executed by FS p.

[Caution]

- Because frequent writing in the non-volatile memory can destroy the memory, the writing command should be used less than 10 times a day.
- Just after the completion of the writing operation into the non-volatile memory, the printer hardware will be reset. Therefore, download characters, download bit images, and macro definition will be made undefined. The receiving buffer/printer buffer will be cleared, and each setting will go back to its default value. Then the status of dip switches will be checked once more.
- It may happen that the printer becomes BUSY during the process of writing data into the non-volatile memory in the execution of this command. When the printer becomes BUSY, it will stop receiving data. Therefore, sending data from the host (Including real time command) is prohibited.

[Related Commands] FS p

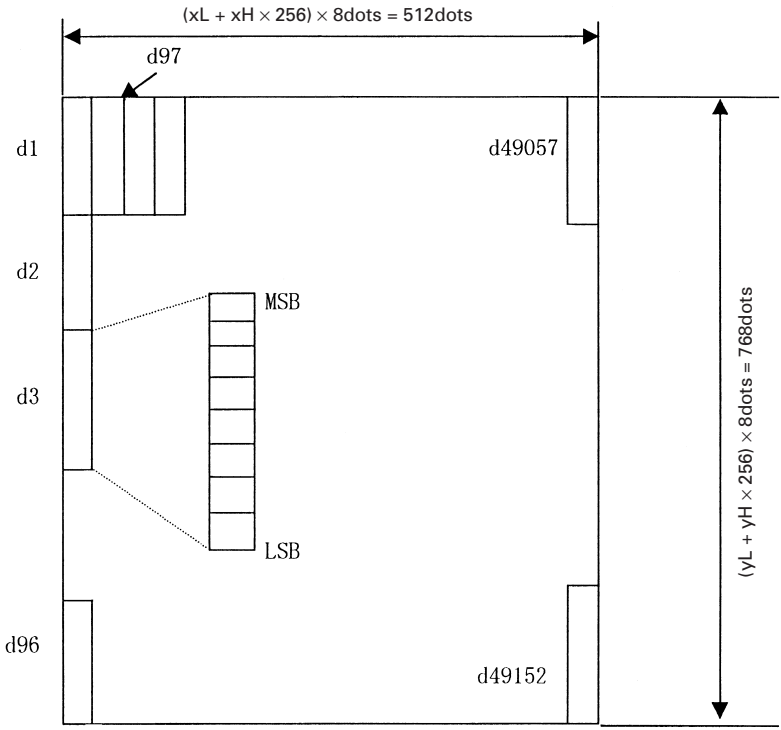

[Example] When xL =64, xH = 0, yL = 96, yH = 0

GS FF (Only for Label Paper)

[Function] Printing and discharging the label.

[Code] <1DH><0C>H

[Outline] This command prints the data in the printer buffer and cuts discharged the label

[Caution] Valid only if "Label" is chosen for paper type.

Operation depends on the selection mechanism:

No auto cutter:

- The label is advanced to the manual cutter.
- The LED flashes, indicating that the printer is ready for manual cutting and subsequent FEED switch operations.
- When the FEED switch is pressed, the next label is advanced to the print position.

With auto cutter:

- The printed label is advanced to the auto cutter position, where it is completely cut off.
- The next label is advanced to the print position.

[See Also] FF, GS <

GS <

[Function] Initializing the printer mechanism

[Code] <1D>H<3C>H

[Outline] Perform a label initialization identical to power-on initialization.

[Caution] This command is valid only if "label" is chosen.

• Parameters configured by commands are not reset.

GS A m n

[Function] Correcting the label top position

[Code] <1DH><41>H<m><n>

[Range] 0 ≦ m ≦ 255
0 ≦ n ≦ 255

[Outline] This command sets the label head position in terms of correction value the default position.
• m denotes the correctingdirection and valid only for the least
• significant bit(m0).

m0	Correcting direction
0	Corrects in the forward direction
1	Corrects in the reverse direction

[Caution]
• This command is valid only if "label" is chosen.
• This command is ignored immediately after the execution of a leader positioning command (FF, GS FF, GS A, GS <) or immediately after leader positioning performed on a paper feed action with the FEED switch, power on, or cover closure.
• The maximum reverse correction span is 0.5 mm. Correction settings exceeding this value are truncated into the maximum value. The label may be mispositioned due to paper flexure. For reverse correction, exercise care so the leader position does not step out of the label.
• For forward correction, set the correction span by taking into account the label length as the printable area changes before and after correction setting.
• In calculating a correction span, use the calculated basic feed span for the vertical direction. The fractional part contained in the calculation result should be used for correction at an increment of the mechanism's minimum feed span, with the remaining fractional part truncated.

[See Also] FF, GS FF

GS C0 m n

[Function] Setting the numbering print mode.

[Code] <1D>H<43>H<30>H<m><n>

[Range] 0 ≦ m ≦ 5
0 ≦ n ≦ 2

[Outline] This command sets the numbering(serial number counter) print mode. m denotes the number of print columns.

m=0	Prints the columns indicated by numeral. In theis case, n has no meaning.
m=1 to 5	Indicates the maximum number of columns to be printed. If a counter value is larger than this the number of columns set with this command, the printer will the lower m-columns of the counter value.

n specifies a printing position within the printing columns.

n=0	Prints the data right justified. The blank columns are spaced.
n=1	Prints the data right justified. The blank columns are filled with "0".
n=2	Prints the data left justified. The right blank will become invalid.

[Caution]
- If either m or n has a value beyond their ranges, that setting will becomes invalid.

[Default] m = 0 , n = 0

[See Also] GS C1, GS C2, GS c, GS C;

[Sample Program]

```
LPRINT CHR$(&H1D) ;"C0";
LPRINT CHR$(0);CHR$(0);
GOUSAB *CNT
LPRINT CHR$(&H1D);"C0";
LPRINT CHR$(1); CHR$(0);
GOUSAB *CNT
LPRINT CHR$(&H1D);"C0";
LPRINT CHR$(3) CHR$(0);
GOUSAB *CNT
LPRINT CHR$(&H1D);"C0";
LPRINT CHR$(3); CHR$(1)
GOUSAB *CNT
LPRINT CHR$(&H1D);"C0";
LPRINT CHR$(3) CHR$(2);
GOUSAB *CNT
END
*CNT
FORI = 1 TO 5
LPRINT CHR$(&H1D);"c";
NEXT I
LPRINT CHR$(&HA);
RETURN
```

[Print Result]

```
12345 <------------- Counts from 1 to 5 at m = 0 and n = 0.
67890 <------------- Counts from 6 to 10 at m = 1 and n = 0.
 11 12  13  14  15 <--- Counts from11 to 15 at m = 3 and n = 0.
0160 170 180 19020 <- Counts from 16 to 20 at m = 3 and n = 1.
21  22  23  24  25 <--- Counts from 21 to 25 at m = 3 and n = 2.
```

GS C1 n1 n2 n3 n4 n5 n6

[Function] Setting the numbering counter mode (A)

[Code] <1D>H<43>H<31>H<n1><n2><n3><n4><n5><n6>

[Range] 0 ≦ n1 , n2 , n3 , n4 , n5 , n6 ≦ 255

[Outline] This command sets the numbering(serial number counter) mode.

n1 + n2 x 256(n1 = remainder, n2 = quotient)	: Counter default
n3 + n4 x 256(n3 = remainder, n4 = quotient)	: Counter final value
n5	: Counter step value
n6	: Idential counter print counter
(n1 + n2 x 256) < (n3 + n4 x 256)	: Count-up system
(n1 + n2 x 256) > (n3 + n4 x 256)	: Count-down system
(n1 + n2 x 256) = (n3 + n4 x 256)or n5 = 0 or n6 = 0	: Counter stop

[Default] n1 + n2 × 256 = 1

n3 + n4 × 256 = 65535

n5 = 1

n6 = 1

[See Also] GS C0 , GS C2 , GS c , GS C ;

[Sample Program]

```
LPRINT CHR$(&H1D) ;"C0";
LPRINT CHR$(3);CHR$(0);
LPRINT CHR$(&H1D);"C1";
LPRINT CHR$(50) CHR$(0);
LPRINT CHR$(0);CHR$(0);
LPRINT CHR$(5);CHR$(2);
GOUSAB *CNT
LPRINT CHR$(&H1D);"C2"
LPRINT CHR$(5); CHR$(0);
GOUSAB *CNT
END
```

```
*CNT
FORI = 1 TO 5
   LPRINT CHR$(&H1D)"c";
NEXT I
LPRINT CHR$(&HA);
RETURN
```

[Print Result]

50 50 45 45 40 40 ←—— When setting a count-down range = 0 to 50 step value = 5, repeat count = 2, and start value = 5 to print a counte value.

5 0 50 45 40 35←—— When setting a count-down range = 0 to 50, step cleared)

GS C2 n1 n2

[Function] Setting the numbering counter

[Code] <1D>H<43>H<32>H<n1><n2>

[Range] 0 ≦ n1 ≦ 255

0 ≦ n2 ≦ 255

[Outline] This command sets the numbering (serial number counter) value.

n1 + n2 x 256(n1= remainder, n2=quotient) becomes a counter value.

[Caution]

- If the counter is set with this command, a repeat count of the idential count will be cleared. If the counter value is beyond the Range specified with the "GS C1" or "GS C;" command, the counter will be initialized.

[Default] Not defined.

[See Also] GS C0, GS C1, GS c, GS C;

[Sample Program]

[Print Result] See the sample program and print result for the GS C1 command.

GS C ; n1 ; n2 ; n3 ; n4 ; n5 ;

[Function] Setting the numbering counter mode (B)

[Code] <1D>H<43>H<3B>H<n1><3B>H<n2><3B>H<n2>
<3B>H<n3><3B>H<n4><3B>H<n5><3B>H
<n1>,<n2>,<n3>,<n4>,<n5> are character codes.

[Range] 0 ≦ n1 , n2 , n5 ≦ 65535
0 ≦ n3 , n4 ≦ 255

[Outline] This command sets the numbering (serial number counter) mode and a counter value.

n1	: Counter default
n2	: Counter final value
n3	: Counter step value
n4	: Idential counter print count
n5	: Counter start value
n1 < n2	: Count-up system
n1 > n2	: Count-down system
n1 = n 2 or n3 = 0 or n4 = 0	: Counter stop

[Caution] If the n5 counter start value is beyond the counter range specified with n1 and n2, it is assumed to be n1 = n5.
If each value of n1 through n5 contains the character code other than “0” through “9”, the printer will invalidate the data up to that parameter and handle the subsequent data as normal data.

[Default] n1 = 1
n2 = 65535
n3 = 1
n4 = 1
n5 = 1

[See Also] GS C0 , GS C1 , GS C2 , GS c

[Sample Program]

```
LPRINT CHR$(&H1D) ;”C0”;
LPRINT CHR$(3);CHR$(0);
LPRINT CHR$(&H1D);”C;”;
LPRINT ”50;0;5;2;50;
GOUSAB *CNT
LPRINT CHR$(&H1D);”C;”;
LPRINT ”50;0;5;2;5”;
GOUSAB *CNT
END
```

```
 *CNT
FORI = 1 TO 5
   LPRINT CHR$(&H1D);”c”;
NEXT I
LPRINT CHR$(&HA);
RETURN
```

[Print Result]

50 50 45 45 40 40 ⟵ When setting a count-down range = 0 to 50, step value = 5, repeat count = 2, and start value = 50 to print a counte value.

5 0 50 45 40 35 ⟵ When setting a count-down range = 0 to 50, step value = 5, repeat count = 1, and start value = 5 to print a counter value.

GS c

[Function] Print the counter

[Code] <1D>H<63>H

[Outline] This command prints the serial number counter data. After setting the current counter value in the print buffer as the print data (Character string), it increments or decrements the counter according to the set count mode.

[Caution]
- When setting the value in the print buffer, its format depends on the GS c command, the counter will be initialized to the set default.

[See Also] GS C0 , GS C1 , GS C2 , GS C ;

[Print Result] See the sample programs and print results for the GS C1 command.

GS I n1L n1H n2L n2H (Only for Label Paper)

[Function] Setting the label length

[Code] <1D>H<6C>H<n1L><n1H><n2L><n2H>

[Range] 0 ≦ n1L ≦ 255 (24 ≦ n1L+ n1H x 256 ≦ 360)

0 ≦ n1H ≦ 1

10 ≦ n2L ≦ 30 (Label paper)

4 ≦ n2L ≦ 8 (Black mark paper)

n2H = 0

[Outline] Define the specifications (length) of the label used.
n1: Sets the label length (Gap between black mark paper)
n2: Sets the label gap length (black mark paper length)
nl and n2 are specified units of millimeters.
Divide the maximum label length by 256 and make the quotient n1L and the remainder n1H.

[Caution]
- If the specified length is outside of label specifications, the default length is set.
- 360 mm is the maximum label length allowed to define and 24 mm is the minimum.
- 30 mm is the maximum allowable label gap length to define and 8 mm (4 mm black mark paper length) is the minimum.

[Default]
- The following default values are set when DS2-9 is set to ON.

Label paper:
Label length = 25 mm (n1L=25 n1H=0): Label gap length = 10 mm (n2L=10 n2H=0)
Black mark paper:
Black mark paper gap = 35 mm (n1L=25 n1H=0)
Black mark paper length = 4 mm (n2L=4 n2H=0)

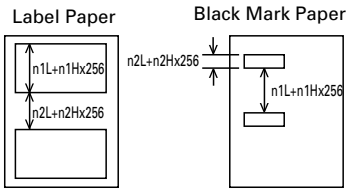

11. CHARACTER CODES TABLE

11.1 Code Page

11.1.1 Codepage 00H to 7FH & PC437 (USA, European Standard)

	0	1	2	3	4	5	6	7	8	9	A	B	C	D	E	F
0	NUL	DLE	SP	0	@	P	‘	p	Ç	É	á	⣿	└	╨	α	≡
1		XON	!	1	A	Q	a	q	ü	æ	í	▒	┴	╤	β	±
2			“	2	B	R	b	r	é	Æ	ó	▓	┬	╥	Γ	≥
3		XOF	#	3	C	S	c	s	â	ô	ú	│	├	╙	π	≤
4	EOT	DC4	$	4	D	T	d	t	ä	ö	ñ	┤	─	╘	Σ	⌠
5	ENQ		%	5	E	U	e	u	à	ò	Ñ	╡	┼	╒	σ	⌡
6			&	6	F	V	f	v	å	û	ª	╢	╞	╓	μ	÷
7			‘	7	G	W	g	w	ç	ù	º	╖	╟	╫	τ	≈
8		CAN	(	8	H	X	h	x	ê	ÿ	¿	╕	╚	╪	Φ	°
9	HT		)	9	I	Y	i	y	ë	Ö	⌐	╣	╔	┘	θ	∙
A	LF		*	:	J	Z	j	z	è	Ü	¬	║	╩	┌	Ω	·
B		ESC	+	;	K	[	k	{	ï	¢	½	╗	╦	█	δ	√
C	FF	FS	,	<	L	\	l	|	î	£	¼	╝	╠	▄	∞	ⁿ
D	CR	GS	−	=	M	]	m	}	ì	¥	¡	╜	═	▌	φ	²
E			.	>	N	^	n	~	Ä	Pt	«	╛	╬	▐	∈	■
F			/	?	O	_	o		Å	ƒ	»	┐	╧	▀	∩	

11.1.2 Codepage Katakana (Japanese)

	8	9	A	B	C	D	E	F
0	▁	┴		━	タ	ミ	ニ	×
1	▂	┬	｡	ア	チ	ム	┣	円
2	▃	┤	｢	イ	ツ	メ	╋	年
3	▄	├	｣	ウ	テ	モ	┫	月
4	▅	─	､	エ	ト	ヤ	◢	日
5	▆	│	･	オ	ナ	ユ	◣	時
6	▇	┼	ｦ	カ	ニ	ヨ	◥	分
7	▇	｜	ｧ	キ	ヌ	ラ	◤	秒
8	▏	┌	ｨ	ク	ネ	リ	♠	〒
9	▕	┐	ｩ	ケ	ノ	ル	♥	市
A	▕	└	ｪ	コ	ハ	レ	♦	区
B	▕	┘	ｫ	サ	ヒ	ロ	♣	町
C	▕	┌	ｬ	シ	フ	ワ	●	村
D	▕	┐	ｭ	ス	ヘ	ン	○	人
E	▕	└	ｮ	セ	ホ	“	／	▒
F	┼	┘	ｯ	ソ	マ	°	＼	

11.1.3 Codepage PC850 (Multilingual)

	8	9	A	B	C	D	E	F
0	Ç	É	á	⠿	└	ð	Ó	—
1	ü	æ	í	▒	┴	Ð	β	±
2	é	Æ	ó	▓	┬	Ê	Ô	‗
3	â	ô	ú	│	├	Ë	Ò	¾
4	ä	ö	ñ	┤	─	È	õ	¶
5	à	ò	Ñ	Á	┼	€	Õ	§
6	å	û	ª	Â	ã	Í	µ	÷
7	ç	ù	º	À	Ã	Î	þ	¸
8	ê	ÿ	¿	©	╚	Ï	Þ	°
9	ë	Ö	®	╣	╔	╝	Ú	¨
A	è	Ü	¬	╗	╩	┌	Û	·
B	ï	ø	½	╝	╦	█	Ù	¹
C	î	£	¼	╜	╠	▄	ý	³
D	ì	Ø	¡	¢	═	¦	Ý	²
E	Ä	×	«	¥	╬	Ì	¯	■
F	Å	ƒ	»	┐	¤	▀	´	

11.1.4 Codepage PC860 (Portuguese)

	8	9	A	B	C	D	E	F
0	Ç	É	á	⠿	└	╨	α	≡
1	ü	À	í	▒	┴	╤	β	±
2	é	È	ó	▓	┬	╥	Γ	≥
3	â	ô	ú	│	├	╙	π	≤
4	ã	õ	ñ	┤	─	╘	Σ	⌠
5	à	ò	Ñ	╡	┼	╒	σ	⌡
6	Á	Ú	ª	╢	╞	╓	µ	÷
7	ç	ù	º	╖	╟	╫	τ	≈
8	ê	Ì	¿	╕	╚	╪	Φ	°
9	Ê	Õ	Ò	╣	╔	╜	θ	∙
A	è	Ü	¬	╗	╩	┌	Ω	.
B	Í	¢	½	╝	╦	█	δ	√
C	Ô	£	¼	╜	╠	▄	∞	ⁿ
D	ì	Ù	¡	╛	═	▌	φ	²
E	Ã	Pt	«	╘	╬	▐	∈	■
F	Â	Ó	»	┐	╧	▀	∩	

11.1.5 Codepage PC863 (Canadian-French)

	8	9	A	B	C	D	E	F
0	Ç	É	¦	⠿	└	╨	α	≡
1	ü	È	´	▓	┴	╥	β	±
2	é	Ê	ó	▒	┬	╤	Γ	≥
3	â	ô	ú	│	├	╙	π	≤
4	Â	Ë	¨	┤	─	╞	Σ	⌠
5	à	Ï	˃	╡	┼	╒	σ	⌡
6	¶	û	ª	╢	╞	╓	μ	÷
7	ç	ù	‾	╖	╟	╫	τ	≈
8	ê	¤	Î	╕	╚	╪	Φ	°
9	ë	Ô	┌	╣	╔	┘	θ	∙
A	è	Ü	¬	║	╩	┌	Ω	.
B	ï	¢	½	╗	╦	█	δ	√
C	î	£	¼	╝	╠	▄	∞	ⁿ
D	=	Ù	¾	╜	═	▌	φ	²
E	À	Û	«	╛	╬	▐	∈	■
F	§	ƒ	»	┐	╧	▀	∩	

11.1.6 Codepage PC865 (Nordic)

	8	9	A	B	C	D	E	F
0	Ç	É	á	⠿	└	╨	α	≡
1	ü	æ	í	▓	┴	╥	β	±
2	é	Æ	ó	▒	┬	╤	Γ	≥
3	â	ô	ú	│	├	╙	π	≤
4	ä	ö	ñ	┤	─	╞	Σ	⌠
5	à	ò	Ñ	╡	┼	╒	σ	⌡
6	å	û	ª	╢	╞	╓	μ	÷
7	ç	ù	º	╖	╟	╫	τ	≈
8	ê	ÿ	¿	╕	╚	╪	Φ	°
9	ë	Ö	┌	╣	╔	┘	θ	∙
A	è	Ü	¬	║	╩	┌	Ω	.
B	ï	ø	½	╗	╦	█	δ	√
C	î	£	¼	╝	╠	▄	∞	ⁿ
D	ì	Ø	¡	╜	═	▌	φ	²
E	Ä	Pt	«	╛	╬	▐	∈	■
F	Å	ƒ	¤	┐	╧	▀	∩	

11.1.7 Codepage PC852 (Eastern Europe)

	8	9	A	B	C	D	E	F
0	Ç	É	á	⠿	└	đ	Ó	–
1	ü	Ĺ	í	▒	┴	Đ	β	˝
2	é	Í	ó	▓	┬	Ď	Ô	˘
3	â	ô	ú	│	├	Ë	Ň	˘
4	ä	ö	Ą	┤	─	ď	ń	˘
5	ů	Ľ	a	Á	┼	Ň	ň	§
6	ć	Ł	Ž	Â	Ă	Í	Š	÷
7	ç	Ś	ž	Ě	ă	Î	š	¸
8	ł	ś	Ę	Ş	╚	ě	Ŕ	°
9	ë	Ö	ę	╣	╔	┘	Ú	¨
A	Ő	Ü		║	╩	┌	ŕ	•
B	ő	Ť	ź	╗	╦	█	Ű	ű
C	î	ť	Č	╝	╠	■	ý	Ř
D	Ź	Ł	ş	Ż	═	Ţ	Ý	ř
E	Ä	×	«	ż	╬	Ů	ţ	▪
F	Ć	č	»	╗	¤	▪	´	

11.1.8 Codepage PC866 (Russian)

	8	9	A	B	C	D	E	F
0	А	Р	а	⠿	└	╨	р	Ё
1	Б	С	б	▒	┴	╤	с	ё
2	В	Т	в	▒	┬	╥	т	Е
3	Г	У	г	│	├	╙	у	ε
4	Д	Ф	д	┤	─	╘	ф	Ї
5	Е	Х	е	╡	┼	╒	х	ї
6	Ж	Ц	ж	╢	╞	╓	ц	Ў
7	З	Ч	з	╖	╟	╫	ч	ў
8	И	Ш	и	╕	╚	╪	ш	°
9	Й	Щ	й	╣	╔	┘	щ	•
A	К	Ъ	к	║	╩	┌	ъ	·
B	Л	Ы	л	╗	╦	█	ы	√
C	М	Ь	м	╝	╠	▄	ь	№
D	Н	Э	н	╜	═	▌	э	¤
E	О	Ю	о	╛	╬	▐	ю	■
F	П	Я	п	┐	╧	▀	я	

11.1.9 Codepage PC857 (Turkish)

	8	9	A	B	C	D	E	F
0	Ç	É	á	⠿	└	º	Ó	–
1	ü	æ	í	▒	┴	ª	ß	±
2	é	Æ	ó	▓	┬	Ê	Ô	
3	â	ô	ú	│	├	Ë	Ò	¾
4	ä	ö	ñ	┤	─	È	õ	¶
5	à	ò	Ñ	Á	┼		Õ	§
6	å	û	Ğ	Â	ã	ı	µ	÷
7	ç	ù	ğ	À	Ã	Î		¸
8	ê	±	¿	©	╚	Ï	×	°
9	ë	Ö	®	╣	╔	╘	Ú	¨
A	è	Ü	¬	╠	╩	╒	Û	•
B	ï	ø	½	╗	╦	╓	Ù	¹
C	î	£	¼	╝	╠	╫	¡	³
D	ı	Ø	¡	¢	=	╪	Ÿ	²
E	Ä	Ş	«	¥	╬	¡	¯	■
F	Å	ş	»	┐	¤	▀	´	

11.1.10 Windows Codepage

	8	9	A	B	C	D	E	F
0	€			°	À	Ð	à	ð
1		‘	¡	±	Á	Ñ	á	ñ
2	‚	’	¢	²	Â	Ò	â	ò
3	ƒ	“	£	³	Ã	Ó	ã	ó
4	„	”	¤	´	Ä	Ô	ä	ô
5	…	•	¥	µ	Å	Õ	å	õ
6	†	–	¦	¶	Æ	Ö	æ	ö
7	‡	—	§	·	Ç	×	ç	÷
8	ˆ	˜	¨	¸	È	Ø	è	ø
9	‰	™	©	¹	É	Ù	é	ù
A	Š	š	ª	º	Ê	Ú	ê	ú
B	‹	›	«	»	Ë	Û	ë	û
C	Œ	œ	¬	¼	Ì	Ü	ì	ü
D			-	½	Í	Ý	í	ý
E			®	¾	Î	Þ	î	þ
F		Ÿ	¯	¿	Ï	ß	ï	ÿ

11.2 International Character Codes Table

	Country	23	24	40	5B	5C	5D	5E	60	7B	7C	7D	7E
0	U.S.A.	#	$	@	[	\	]	^	‘	{	|	}	~
1	France	#	$	à	°	ç	§	^	‘	é	ù	è	¨
2	Germany	#	$	§	Ä	Ö	Ü	^	‘	ä	ö	ü	β
3	U.K.	£	$	@	[	\	]	^	‘	{	|	}	~
4	Denmark I	#	$	@	Æ	Ø	Å	^	‘	æ	ø	å	~
5	Sweden	#	¤	É	Ä	Ö	Å	Ü	é	ä	ö	å	ü
6	Italy	#	$	@	°	\	é	^	ù	à	ò	è	ì
7	Spain I	Pt	$	@	¡	Ñ	¿	^	‘	¨	ñ	}	~
8	Japan	#	$	@	[	¥	]	^	‘	{	|	}	~
9	Norway	#	¤	É	Æ	Ø	Å	Ü	é	æ	ø	å	ü
10	Denmark II	#	$	É	Æ	Ø	Å	Ü	é	æ	ø	å	ü
11	Spain II	#	$	á	¡	Ñ	¿	é	‘	í	ñ	ó	ú
12	Latin America	#	$	á	¡	Ñ	¿	é	ü	í	ñ	ó	ú
13	Korea	#	$	@	[	₩	]	^	‘	{	|	}	~

12. APPENDIX 1. PAGE MODE

12.1. Overview

The printer has two print modes: STANDARD and PAGE.
In STANDARD MODE, the printer prints or feeds paper each time it receives a print or paper feed command. In PAGE MODE, when the printer receives print commands and/or form feed commands, it simply forwards them to the specified print area of memory. Only when an ESC FF or FF is executed, all the data mapped in the print area will then be printed in a batch.
For example, suppose you executed a print and line feed for data “ABCDEF”<LF>. In STANDARD MODE, the data “ABCDEF” is printed and paper is advanced one line. In PAGE MODE, the data “ABCDEF” is written in the specified print area of memory, and the memory location for the storage of the next print data is shifted one line.
The printer enters PAGE MODE with an ESC L, so that all commands received after that point are handled in PAGE MODE. When an ESC FF is executed, the data received until then is printed in a batch. When an FF is executed, the data received until then is printed in a batch, after which the printer returns to STANDARD MODE. An ESC S causes the printer to immediately return to STANDARD MODE; any print data, however, that has been stored in PAGE MODE is not printed. Instead it will be cleared.

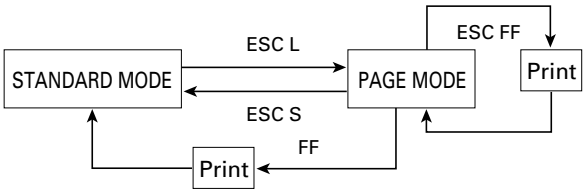

[Switching Between STANDARD MODE and PAGE MODE]

Command values in STANDARD MODE and PAGE MODE:

(1) The values set with commands are common to the standard and PAGE MODES. The values set with any of the four commands listed below are, however, treated differently and stored separately for the standard and PAGE MODES.
• ESC SP, ESC 2, ESC 3

(2) The maximum printable size of a bitmap image is 576 dots for STANDARD MODE. In PAGE MODE, the size can be extended up to 575 bits in the y direction (Paper feed direction) if 575 bits are reserved for y of the print area set by ESC W and the value of print direction “n” specified by ESC T is 1 or 3.

12.2 Mapping of print data in the print area

Print data is mapped in the print area as follows:

(1) The print area is set by ESC W. When the printer has finished all of the print and paper feed actions specified before receiving an ESC W, the ESC W sets the left end (As viewed facing the printer) as the start point (x0, y0) of the print area. The print area is a rectangle defined by two edges extending from the start point (x0, y0): one edge running in the x (Horizontal) direction by dx pitch (Inclusive of the start point), and the other running in the y (Vertical) direction by dy pitch. (If no ESC W is defined, the default values are used to define the print area.)

(2) With a print area defined by ESC W and a print direction specified by ESC T, when the printer receives print data, the print data is mapped in the print area where point A (See the figure "Mapping Position for Character Data") is used as the initial value of the start point. If the print data consists of characters, this start point serves as the baseline.
If the print data is a downloaded bitmap image or a bar code, the print data is mapped with its lower-left point "B" aligned to the baseline. (See the figure "Mapping Positions for Print Data".)
When attempting to map the HRI characters of a bar code, however, the section above the standard character height will not be printed.

(3) If print data (Or the space to the right of a character) extends beyond the print area before a command that involves a line feed (For example, LF or ESC J command) is received, a line feed is automatically executed in the print area, so that the mapping position of the print data is moved one line. The next mapping position will be the beginning of the line. In this case, the line feed width is as defined by a command such as ESC 2 or ESC 3.

(4) By default, the line feed width is 1/6 inch, which is equivalent to 34 dots. If the print data for the next line includes a vertically doubled or taller character , a downloaded bitmap image extending two or more lines, or a bar code taller than the character height, the data, therefore, falls short of the line feed width, causing the upper dots of the character to overlap the print data of the current line. The line feed width needs to be increased.

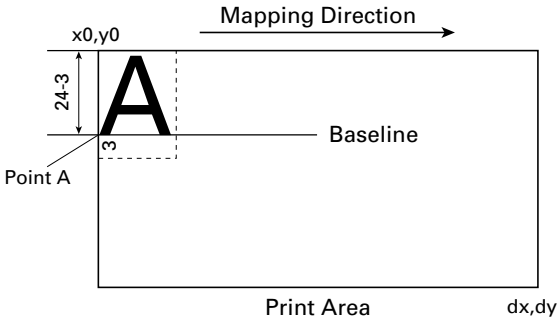

[Mapping Position for Character Data]

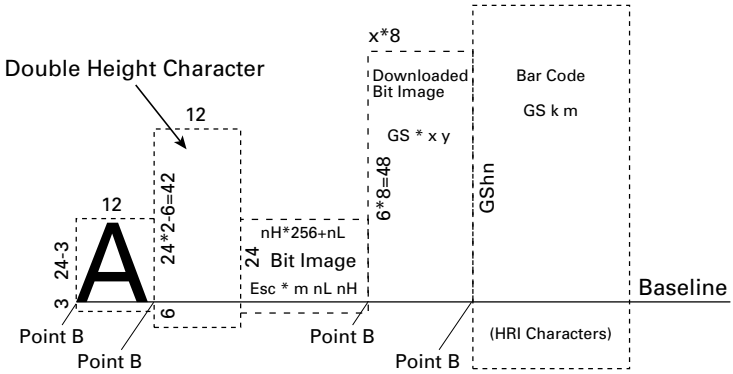

[Mapping Positions for Print Data]

12.2.1 Example of the Use of PAGE MODE

The following explains specific uses of PAGE MODE.
When in PAGE MODE, the commands are typically sent from the host to the printer in the following sequence:

(1) An ESC L puts the printer in PAGE MODE.
(2) An ESC W specifies the print area.
(3) An ESC T specifies the print direction.
(4) Print data is sent.
(5) An FF instructs the printer to print the print data in a batch.
(6) After printing, the printer returns to STANDARD MODE.

<Example 1>

```
LPRINT CHR$(&H1B) + “L”;
LPRINT CHR$(&H1B) + “W”+ CHR$(0) + CHR$(0) + CHR$(0) + CHR$(0);
LPRINT CHR$(200) +CHR$(0) + CHR$(144) + CHR$(1);
LPRINT CHR$(&H1B) +“T”+ CHR$(0);
LPRINT “Page Mode lesson Test1”;
LPRINT CHR$(&HC);
END
```

The program in Example 1 reserves a print area of 200 × 400 pitches extending from the start point (0, 0), and then prints the text “Page Mode lesson Test 1” on the first line of the print area as shown in Figure 1-1.

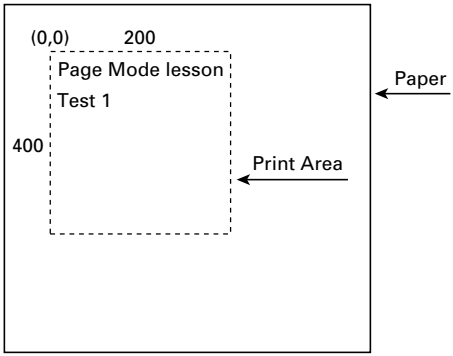

Figure 1-1

In Figure 1-1, a line feed occurs between “lesson” and “Test 1” because the space “ “ next to “lesson” dose not fit in the horizontal range of the 200 × 400-pitch print area. The line feed width conforms to the value specified by a command such as ESC 3.
It is possible to set as many print areas as desired before executing FF. If print areas overlap each other, the print area setup data are ORed with the previous data.
If you want to erase a section of mapped data, use the CAN command. The CAN command erases all data in the print area being specified. You can, therefore, use an ESC W to define a print area that encloses the section you want to erase, and then execute the CAN command, so that the section of the data is erased.
It is important to remember that any part of a character that overlaps with the specified print area will be erased.

<Example 2>

```
LPRINT CHR$(&H1B) + “L”;
LPRINT CHR$(&H1B) + “W” + CHR$(0) + CHR$(0) + CHR$(0) + CHR$(0);
LPRINT CHR$(200) + CHR$(0) + CHR$(144) + CHR$(1);
LPRINT CHR$(&H1B) + “T” + CHR$(0);
LPRINT “Page Mode lesson 2 CAN command”;
LPRINT CHR$(&HA);
LPRINT “ABCDEFGHIJKLMNOPQRSTU1234567890”;
LPRINT CHR$(&HC);
END
```

First, an ESC L is sent to switch to PAGE MODE (1st line). Next, an ESC W is used to send eight arguments, n1 to n8, to reserve a print area. In this example, the arguments are sent in the sequence of 0, 0, 0, 0, 200, 0, 144, and 1, to reserve a print area that measures 200 from the start point (0, 0) in the x direction and 400 in the y direction (2nd and 3rd lines). Furthermore, an ESC T is used to specify the print direction to be 0 (4th line).
After the above setup, print data is sent (5th to 7th lines). Finally, an FF is sent (8th line) to produce a print-out as shown in Figure 1-2.

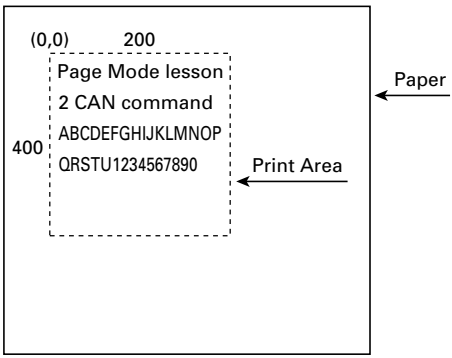

Figure 1-2

Before an FF is sent, the following program code can be added to remove part of the data.

```
LPRINT CHR$(&H1B) + “W” + CHR$((72) + CHR$(0) + CHR$(120) + CHR$(0);
LPRINT CHR$(36) + CHR$(0) + CHR$(48) + CHR$(0);
LPRINT CHR$(&H18);
LPRINT CHR$(&HC);
END
```

As a result of the additional program code, a print-out is executed as shown in Figure 1-3, where the string “GHI” is removed. When strings are removed with CAN, the area where the string would have been is not used by the rest of the data, instead it is converted into a sequence of spaces.

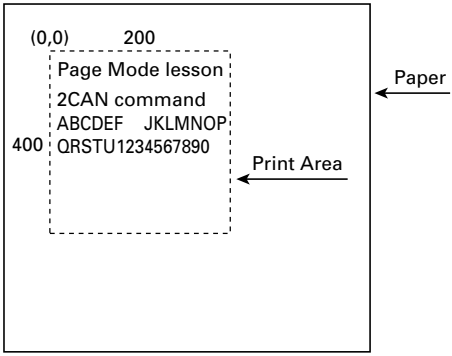

Figure 1-3

13. APPENDIX 2. BIDIRECTIONAL PARALLEL INTERFACE

13.1 Overview

The interface of the printer is a Level-1 compatible device according to IEEE-P1284. It supports the communication modes described in 13.1.1 below.

13.1.1 Parallel Interface Communication Modes

The parallel interface of the printer provides three communication modes as outlined below. When the printer is turned on or reset, it defaults to Compatibility mode.

- Compatibility Mode
  Data is transmitted from the host to the printer in units of one byte. Usually, this mode is used for data transmission. You may switch to the other modes from Compatibility mode.

- Nibble Mode
  Data is transmitted from the printer to the host in units of four bits. The data transmission from the printer uses a status signal line. To send one byte of data in this mode, two sets of four-bit data are sent consecutively.

- Byte Mode
  Data is transmitted from the printer to the host in units of one byte. Data transmission from the printer uses an 8-bit data signal line. For Byte mode, the host must be capable of toggling the signal direction over the 8-bit data signal line. Communication from the host to the printer is called Forward mode, while communication from the printer to the host is called Reverse mode.

13.1.2 Interfacing Phases

Interfacing in each communication mode is divided into several phases. In addition, there is a phase for mode initialization, as well as a phase for mode switching. Interface signals may differ in name and function for different modes and different phases.

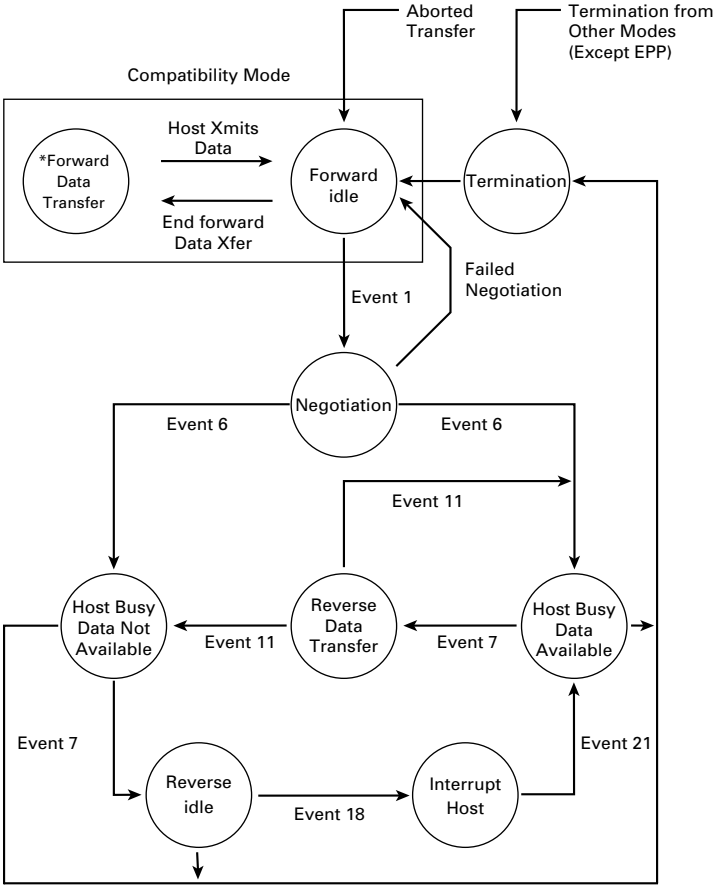

13.2 Negotiation

13.2.1 Overview

Usually, the printer is started in Compatibility mode, which corresponds to the Centronics interface phase. When the host intends to switch to the Nibble or Byte mode, it sends a request and negotiates with the printer. A general flow of negotiations is given below.

1) The host sets the IEEE 1284 Active signal to High. In response, the printer moves into the Negotiation phase.
2) The printer replies whether it can execute the mode requested by the host.
3) The interface terminates the Negotiation phase and moves into the communication phase.

13.2.2 Negotiation Procedure

The negotiations proceed as follows:

1) In IEEE 1284 communication phase, the host and printer are in Compatibility mode by default. They remain in Compatibility mode as long as the host recognizes the connected device as an IEEE 1284 compatible device.
2) To start negotiations, the host sets the communication mode request bit on the data path. (Event 0)
3) The host sets IEEE 1284 Active (nSelectIn) to High, and HostBusy (nAutoFd) to Low. (Event 1)
4) The printer responds by setting PtrClk (nAck) to Low, nDataAvail (nFault) to High, Xflag (Select) to High, and AckDatReq (PError) to High. (Event 2)
5) The host sets HostClk (nStrobe) to Low. In response, the printer latches the data of the communication mode request bit. (Event 3)
6) The host sets HostClk (nStrobe) and HostBusy (nAutoFd) to High. (Event 4)
7) If the printer has communication data to send to the host, it sets AckDataReq (PError) to Low, nDataAvail (nFault) to Low, and Xflag (Select) to the value corresponding to the communication mode. (Event 5)
   Xflag: Nibble Mode: Low,
   Byte Mode: High
8) The printer sets PtrClk (nAck) to High to indicate that it is ready to read status lines. (Event 6)
9) If the printer has communication data to send to the host, the host moves into the Host Busy Available phase or Termination phase, and then returns to the Compatibility mode.
10) If the printer has no communication data to send to the host, the host moves into the Host Busy Data Not Available phase or Termination phase, and then returns to the Compatibility mode.
11) If the printer cannot support the communication mode requested by the host, it sets Xflag (Select) as follows:
   When Nibble mode is requested: High
   When Byte mode is requested: Low

13.2.3 Precautions

1) The Negotiation phase is triggered when the IEEE 1284 Active signal sent by the host becomes High.
2) In Compatibility mode, the time when the negotiation process begins is, as a general rule, after the host sets nStrobe to High and then the printer outputs an nAck pulse.
   Once the nStrobe signal is set to High, however, the printer immediately moves into the Negotiation phase when the high state of IEEE 1284 Active is detected, even if the nAck pulse has yet to be output or is being output. In this case, if the printer has returned to Compatibility mode after Termination, no nAck pulse will be output.
3) Negotiations can be entered from the Busy or Error state of the Compatibility mode. In this case, the printer will not return to the Busy or Error state before the negotiations, but still remains in the printer state just after Termination.
4) If the host requested a communication mode that is not supported by the printer, it must move into the Termination phase and return to the Compatibility mode.

Table 2.4.1 Definitions of Request Bits in IEEE 1284 Communication Mode

Bit	Definition	Bit Values (76543210)	Hex.	Xflag	
				When supported	In the printer
7	Request Extensibility Link	10000000	80H	High	Low
6	Request EPP Mode	01000000	40H	High	Low
5	Request ECP Mode with RLE	00110000	30H	High	Low
4	Request ECP Mode	00010000	10H	High	Low
3	Reserve	00001000	08H	High	Low
2	Request Device ID: Return Data Using Nibble Mode Rev Channel Transfer Byte Mode Rev Channel Transfer ECP Mode Transfer without RLE ECP Mode Transfer with RLE	 00000100 00000101 00010100 00110100	 04H 05H 14H 34H	 High High High High	 High High Low Low
1	Reserve	00000010	02H	High	Low
0	Byte Mode Reverse Channel Transfer	00000001	01H	High	High
None	Nibble Mode Reverse Channel Transfer	00000000	00H	Low	Low
	Illegal or Contradictory Request	Other than above	Other than above	—	Low

Note: The printer only supports the Nibble and Byte modes. For a request for any other mode, Xflag is set to Low.

13.2.4 Data Communication from Printer to Host

13.2.4.1 Nibble Mode

In this mode, data is transferred between the printer and the host through the procedure described below. The steps beginning from 1) are applicable when the Negotiation phase has switched to the Host Busy Data Available phase. If the Negotiation phase has switched to the Host Busy Data Not Available phase, the procedure starts at step 9).

1) After the negotiations for the entry into Nibble mode are completed, the host sets HostBusy (nAutoFd) to Low to indicate that it is ready to receive data from the printer. (Event 7)
2) The printer places the low-order four bits on the reverse channel data line and sets PtrClk (nAck) to Low. (Events 8 and 9)
3) The host sets HostBusy (nAutoFd) to High to indicate that it has latched data and received the signal in event 9. (Event 10)
4) The printer sets PtrClk (nAck) to High. This completes transfer of the first nibble. (Event 11)
5) Steps 1) to 3) are repeated to transfer the high-order four bits, before proceeding to steps 6) and on.
6) After the host has set HostBusy (nAutoFd) to High (Event 10) and received data, the printer must set the four status lines as shown below. (Event 13)
   - PtrBusy (Busy): Returned to the status given in FORWARD MODE.
   - nDataAvail (nFault): Set to Low if there is data to be sent.
   - AckDataReq (PError): Set to Low if there is data to be sent.
   - Xflag (Select): Set to the current mode (i.e., set to Low).
7) The printer sets PtrClk (nAck) to High. (Event 11)
8) After event 11, the host checks the signals set by the printer in event 13. With this check the host determines:
   1. Whether there is more data to be sent from the printer to the host;
   2. And whether data can be transferred from the host to the printer.
9) If there is no more data to be sent from the printer after the transfer of one byte (Two nibbles), the host chooses one of three status selections:
   1. Performing Termination and returning to the Compatibility mode.
   2. Remaining in the Host Busy Data Not Available phase.
   3. Setting HostBusy (nAutoFd) to Low (Event 7) and moving to the Reverse Idle phase.
10) If there is more data to be received from the printer, the host chooses one of three status selections:
    1. Setting HostBusy (nAutoFd) to Low and indicating that the host is ready to receive.
    2. Remaining in the Host Busy Data Available phase.
    3. Performing Termination and returning to the Compatibility mode.
11) If the host selected the Host Busy Data Available phase and set HostBusy (nAutoFd) to Low, the printer repeats the steps from 2) onwards.

12) If the host selected the Reverse Idle phase and new data becomes available to be sent from the printer, the printer sets PtrClk to Low to request the host for an interrupt. (Event 18)
13) The printer sets PtrClk back to High. (Event 19)
14) Upon receiving a request for interrupt from the printer, the host responds by setting HostBusy (nAutoFd) to High. (Event 20)
15) Finally, the printer responds to the host by setting AckDataReq (PError) to Low, and then the host moves to the Host Busy Data Available phase. (Event 21)

13.2.4.2 Byte Mode

In this mode, data is transferred between the printer and the host through the procedure described below. The steps beginning from 1) are applicable when the Negotiation phase has switched to the Host Busy Data Available phase. If the Negotiation phase has switched to the Host Busy Data Not Available phase, the procedure starts at step 9).

1) After the negotiations for the entry into the Byte mode are complete, the host indicates that it is ready to receive data from the printer. This is indicated by switching the data bus to a high-impedance state and setting HostBusy (nAutoFd) to Low. (Events 14 and 7)
2) The printer places communication data on the data bus. (Event 15)
3) The printer sets PtrClk (nAck) to Low. (Event 9)
4) The host sets HostBusy (nAutoFd) to High to indicate that it has latched data and received the signal in event 9. (Event 10)
5) The printer must set the four status lines as shown below. (Event 13)
   - PtrBusy (Busy): Returned to the status given in the Forward mode.
   - nDataAvail (nFault): Set to Low if there is data to be sent.
   - AckDataReq (PError): Set to Low if there is data to be sent.
   - Xflag (Select): Set to the status given during the last negotiation. (i.e., set to Low)
6) The printer sets PtrClk (nAck) to High (Event 10) and ends the Byte handshake. (Event 11)
7) The host indicates that it has succeeded in receiving the data. This is indicated by setting HostClk (nStrobe) to Low (Event 16) and then to High. (Event 17)
8) Events 10 and 16 may occur simultaneously, and events 7 and 17 may occur simultaneously. (Such as when HostBusy and HostClk are used together.)
9) After transferring one byte of data, the printer signals to the host whether it has more data to transfer. When there is no more data to be received by the host from the printer, the host chooses one of three status selections:
   1. Performing Termination and returning to the Compatibility mode.
   2. Remaining in the Host Busy Data Not Available phase.
   3. Setting HostBusy (nAutoFd) to Low and moving to the Reverse Idle phase. (Event 7)

10) When more data is to be received from the printer, the host chooses one of three status selections:
    1. Setting HostBusy (nAutoFd) to Low and indicating that the host is ready to receive.
    2. Remaining in the Host Busy Data Available phase.
    3. Performing Termination and returning to the Compatibility mode.

13.2.5 Device ID

The device ID is a character string that provides the ID, the type, and other information regarding the printer connected to the interface. When the printer receives a request for a device ID from the host, it replies with the following device ID:

<00> H <2E> H
MFG : CBM ;
CMD : ESC / POS ;
MDL : CBM1000 ;
CLS : PRINTER ;

The first two bytes of the device ID indicate the length of the entire device ID (Including the first two bytes themselves). For a description of a request for a device ID, refer to the “Negotiation” section earlier in the present Appendix. When the host receives the device ID string of the length indicated by the first two bytes, it must do so consecutively, without terminating the process until the entire device ID is received. If the process is terminated halfway, the printer discards the rest of the string; when the printer receives a new request for the device ID, it sends the device ID beginning from the first character of the ID. After receiving the ID of the length indicated by the first two bytes, the host must carry out the termination even if the printer has data to send (Data Available). If the host does not carry out Termination and tries to receive data, the printer sends the printer status.

13.2.6 Termination

Termination is the process of returning to Compatibility mode from the Nibble or Byte modes. When performing Termination, the host sets the signals as follows:

- IEEE 1284 Active (nSelectIn): Low
- HostBusy (nAutoFd): High (Event 22)

There are two methods of Termination:
(1) Termination through a handshake between the host and the printer.
(2) Immediate termination.

(1) Termination through a handshake between the host and the printer:
When switching from Reverse mode to Compatibility mode, this termination method can be used if the interface is activated (IEEE 1284 Active: High) and event 22 has taken place.

1) The printer responds to IEEE 1284 Active by setting PtrBusy (Busy) and nDataAvail (nFault) to High. (Event 23)
2) The printer then inverts Xflag (Select) and sets PtrClk (nAck) to Low. (Event 24)
3) The host sets HostBusy (nAutoFd) to Low. (Event 25)
4) The printer returns nDataAvail (nFault), Xflag (Select), and AckDataReq (PError) to the status given in the Compatibility mode, and sets PtrClk (nAck) to High. (Events 26 and 27)
5) The host sets HostBusy (nAutoFd) to High to terminate the handshake and return the interface to the Compatibility Mode Idle phase. (Event 28)
6) The printer changes PtrBusy (Busy) to be able to receive data from the host.

(2) Immediate termination:

1) If the interface is deactivated (IEEE 1284 Active: Low) without event 22 having taken place, the printer immediately performs Termination. In this termination, the data is not guaranteed, and the printer switches the data bus from output to input within 1 μsec.

In the Reverse Idle phase, the printer can notify the host that it has data to transfer to the host. The notification may occur simultaneously with termination in order for the host to move from the Idle phase to the Compatibility mode.
If the printer has data to send, it initiates the Interrupt phase indicated by events 8 and 9. In this case, if 1284 - Active (nSelectIn) was set to Low before HostBusy (nAutoFd) changed from High to Low, the printer interprets that the host has switched to the Termination phase, and then completes the normal termination through handshaking.

14. APPENDIX 3.IDENTIFICATION OF SEND STATUS

Because the status sent from the printer has certain fixed bits, it is possible to identify to which command the status belongs.
When using ASB (Automatic Status Back), however, the first byte of ASB should be checked, and then the three consecutive bytes except for XOFF should be treated as ASB data.

Identification of Send Status

Command and function	Status
GS I	<0**0****>B
GS r	<0**0****>B
XON	<00010001>B
XOFF	<00010011>B
DLE EOT	<0**1**10>B
ASB (1st byte)	<0**1**00>B
ASB (2nd - 4th bytes)	<0**0****>B

15. APPENDIX 4. OUTLINE DRAWING

15.1 CBM1000S

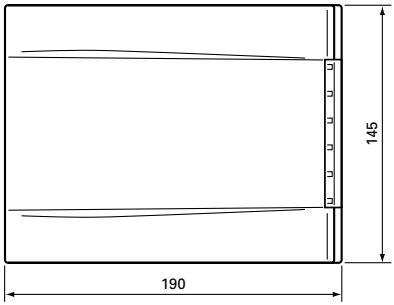

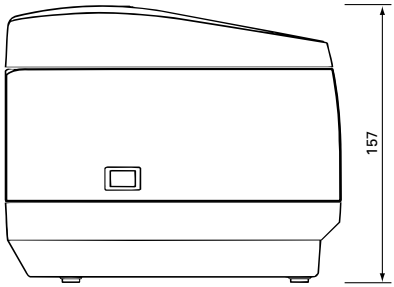

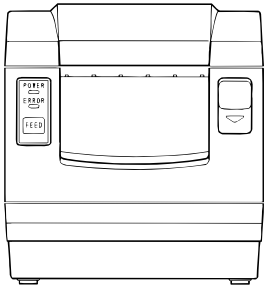

15.2 CBM1000A / CBM1000D

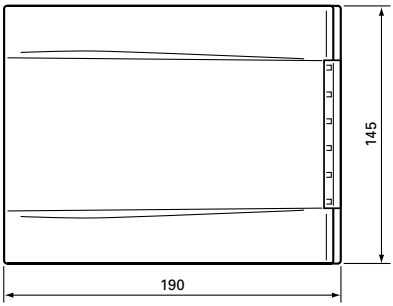

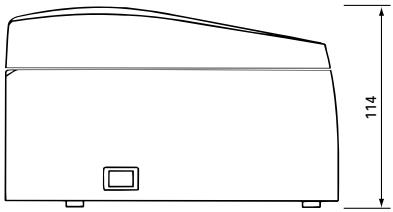

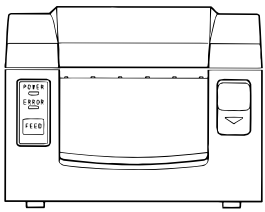

15.3 AC Adapter (31AD)

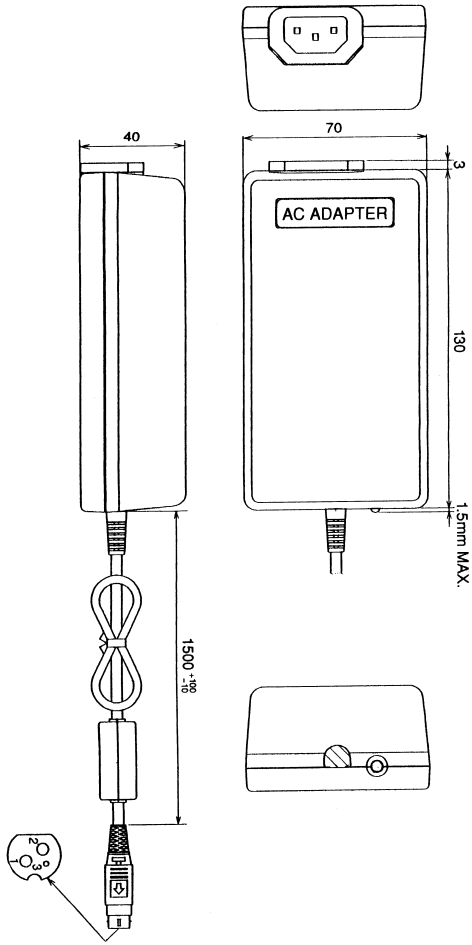

16. APPENDIX 5. BLOCK DIAGRAM

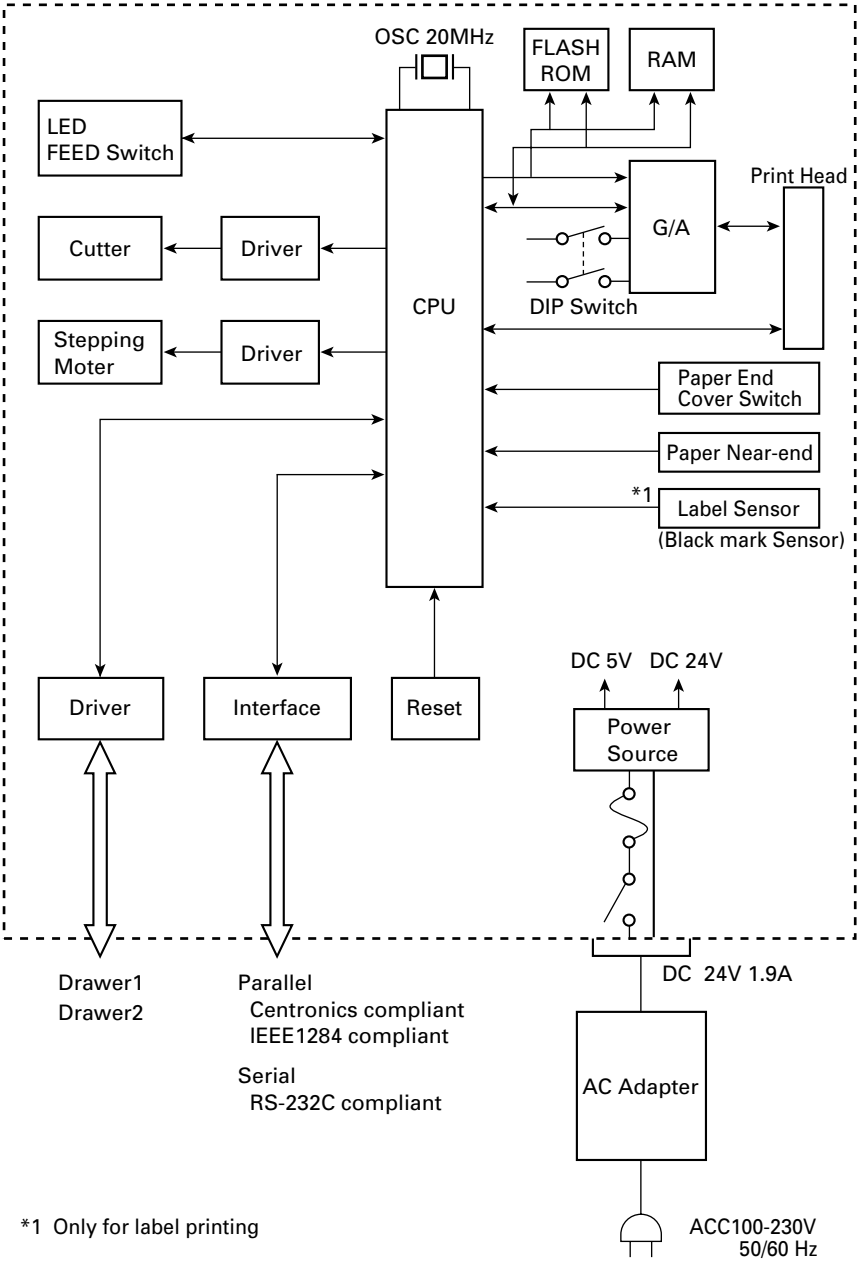

*1 Only for label printing

GERMAN

ALLGEMEINE VORSICHTSMASSNAHMEN

- Bevor Sie den Drucker CBM1000 verwenden, lesen Sie dieses Benutzerhandbuch gründlich. Bewahren Sie es griffbereit auf, so daß Sie darin gegebenenfalls nachschlagen können.
- Die in diesem Handbuch enthaltenen Informationen können ohne vorherige Ankündigung geändert werden.
- Das Benutzerhandbuch darf ohne zuvor erteilte Genehmigung weder in Auszügen noch insgesamt reproduziert werden.
- Druckerkomponenten, die nicht ausdrücklich im Handbuch beschrieben werden, dürfen nicht gewartet, demontiert oder repariert werden.
- Beachten Sie, daß CBM nicht für Schäden haftet, die auf falschen Betrieb, falsche Handhabung oder ungeeignete Betriebsumgebungen zurückzuführen sind, welche nicht im Benutzerhandbuch beschrieben werden.
- Betreiben Sie diesen Drucker nur in der im Benutzerhandbuch beschriebenen Art und Weise. Anderenfalls können Unfälle verursacht werden oder sonstige Probleme entstehen.
- Daten haben im allgemeinen temporären Charakter; sie können nicht über einen langen Zeitraum oder dauerhaft gespeichert werden. Beachten Sie bitte, daß CBM nicht für Schäden oder entgangenen Gewinn aufgrund eines Datenverlusts haftet, der auf Unfälle, Reparaturen, Tests usw. zurückzuführen ist.
- Wenn Sie Fragen oder Anmerkungen zu Schreibfehlern oder Auslassungen in bezug auf die Informationen im Benutzerhandbuch haben, setzen Sie sich mit Ihrem CBM-Händler in Verbindung.
- Beachten Sie bitte, daß CBM für Ergebnisse oder Auswirkungen nicht haftet, die sich aus dem Betrieb dieses Druckers ergeben. Eine Haftung besteht selbst dann nicht, wenn die in diesem Benutzerhandbuch beschriebenen Anweisungen ordnungsgemäß eingehalten wurden.

SICHERHEITSVORSCHRIFTEN — BITTE UNBEDINGT EINHALTEN!

In diesem Benutzerhandbuch werden spezielle Warnsymbole verwendet, um Sicherheitsrisiken für das Bedienungspersonal oder andere Personen sowie Sachschäden auszuschalten. Diese Warnsymbole machen auf wichtige Punkte aufmerksam, die unbedingt eingehalten werden müssen.

- The following describes the degrees of hazards and damages that can occur if the CBM 1000 Printer is incorrectly operated without observing the instructions indicated by the warning symbols.

⚠ WARNUNG

Wenn diese Vorschriften nicht beachtet werden, die auf diesem Symbol aufgeführt werden, kann die Mißachtung der Vorschriften den Tod oder schwerwiegende Verletzungen zur Folge haben.

⚠ ACHTUNG

Wenn die Vorschriften nicht beachtet werden, die auf diesem Symbol aufgeführt werden, kann diese Mißachtung der Vorschriften Verletzungen oder Sachbeschädigungen zur Folge haben.

⚠ Dieses Symbol soll Ihre Aufmerksamkeit auf wichtige Punkte lenken.

ⓘ Dieses Symbol soll Ihre Aufmerksamkeit auf nützliche Informationen, wie beispielsweise Verfahren, Anweisungen usw., lenken.

⚠ WARNUNG

- **Behandeln Sie den Drucker CBM1000 niemals in der nachstehend beschriebenen Weise. Anderenfalls kann er beschädigt werden, funktionsuntüchtig werden oder überhitzen, Rauch entwickeln, und es entsteht möglicherweise ein Brand, oder es besteht die Gefahr eines elektrischen Schlags. Sollte der Drucker beschädigt werden oder ausfallen, schalten Sie unbedingt die Stromversorgung aus, ziehen Sie den Netzstecker aus der Netzsteckdose, und setzen Sie sich mit Ihrem CBM-Händler in Verbindung.**
  - Setzen Sie den Drucker niemals heftigen Schlägen oder Stößen aus, indem Sie gegen den Drucker treten, auf ihn schlagen, ihn fallen lassen usw.
  - Stellen Sie den Drucker an einem gut belüfteten Ort auf. Stellen Sie ihn nicht so auf, daß die Lüftungsöffnungen blockiert werden.
  - Stellen Sie den Drucker nicht an Orten wie einem Laboratorium auf, in dem chemische Reaktionen zu erwarten sind, und stellen Sie ihn auch nicht an Orten auf, an denen salzhaltige Gase in der Atmosphäre vorhanden sind.
  - Betreiben Sie den Drucker nur an der vorgeschriebenen Netzspannung und Netzfrequenz.
  - Wenn Sie das Netzkabel oder Datenkabel installieren oder abtrennen, ziehen Sie nicht am Kabel selbst.
  - Ziehen oder tragen Sie den Drucker auf keinen Fall an den Kabeln, weil auf diese Weise unzulässige Kräfte auf die Kabel ausgeübt würden.
  - Lassen Sie auf keinen Fall Fremdkörper in den Drucker fallen, wie z. B. Büroklammern oder Nadeln etc.
  - Sorgen Sie dafür, daß keinerlei Flüssigkeiten in den Drucker gelangen, und sprühen Sie auch keine Flüssigkeiten, die Chemikalien enthalten, auf den Drucker. Wenn Flüssigkeit in den Drucker eingedrungen ist, schalten Sie ihn aus, ziehen Sie das Netzkabel aus der Netzsteckdose, und setzen Sie sich mit dem CBM-Händler in Verbindung.
  - Schließen Sie den Drucker nicht an eine Netzsteckdose an, die bereits andere Geräte mit Strom versorgt.
  - Demontieren Sie den Drucker nicht, und bauen Sie ihn auch nicht um. Anderenfalls kann ein Brand entstehen, oder es besteht die Gefahr eines elektrischen Schlags.
  - Sollte unbeabsichtigt Wasser in das Gerät eindringen, sofort den Netzstecker abziehen und an einen Fachhändler wenden. Der forgesetzte Betrieb in diesem Zustand kastand kann zu Bränden und elektrischen Schlägen führen.
  - Beschädigen Sie das Netzkabel nicht, indem Sie es brechen, verbiegen, verändern, extrem verdrehen, ziehen order bündeln. Vermeiden Sie es auch, schwere Gegenstände auf das Netzkabel zu stellen oder es zu erhitzen. Dadurch kann das Netzkabel beschädigt werden was dann u.U. zu Bränden, elektrischen Schlägen oder Fehlfunktionen führt. Sollte das Netzkabel beschädigt worden sein, wenden Sie sich an Ihren Fachhändler.
  - Das Netzteil niemals mit nassen Händen anschließen oder trennen. Hierdurch können Brände, elektrische Schläge und sonstige Probleme entstehen.

- Die Kunststoffhülle, in die der Drucker verpackt ist, muß ordnungsgemäß entsorgt werden. Sie darf Kindern auf keinen Fall zugänglich gemacht werden. Wenn die Kunststoffhülle über den Kopf gezogen wird, besteht Erstickungsgefahr.

VORSICHTSMASSNAHMEN FÜR DIE INSTALLATION

- Betreiben und lagern Sie den Drucker CBM1000 auf keinen Fall an Orten, die Feuer, Feuchtigkeit oder direkter Sonneneinstrahlung ausgesetzt sind, oder an Orten, an denen die vorgeschriebene Betriebstemperatur und Feuchtigkeit nicht eingehalten werden, oder an Orten, die Ölnebel, Eisenpulver oder Staub ausgesetzt sind. Anderenfalls der Drucker beschädigt werden, Rauch absondern oder Feuer fangen.
- Stellen Sie den Drucker nicht an Orten wie einem Laboratorium auf, in dem chemische Reaktionen zu erwarten sind, und stellen Sie ihn auch nicht an Orten auf, an denen salzhaltige Gase in der Atmosphäre vorhanden sind. Anderenfalls kann ein Brand entstehen, oder es besteht die Gefahr eines elektrischen Schlags.
- Installieren Sie den Drucker auf einem ebenen und stabilen Tisch an einem gut belüfteten Ort auf, der keinen Schwingungen ausgesetzt ist (achten Sie darauf, die Lüftungsöffnungen des Druckers nicht zu blockieren.)
- Stellen Sie keine Gegenstände auf den Drucker. Anderenfalls entstehen dadurch möglicherweise Probleme.
- Betreiben Sie den Drucker nicht in der Nähe eines Radios oder Fernsehgeräts. Schließen Sie den Drucker nicht zusammen mit einem Radio oder Fernsehgerät an dieselbe Steckdose an, weil auf diese Weise der Empfang gestört werden kann.
- Betreiben Sie den Drucker nur an der vorgeschriebenen Netzspannung und Netzfrequenz. Anderenfalls kann der Drucker Rauch absondern, oder es können andere Probleme entstehen.
- Überzeugen Sie sich, daß die Netzsteckdose, an die der Drucker angeschlossen ist, ausreichend Strom liefern kann.
- Schließen Sie nicht mehrere Geräte an eine einzelne Steckdose an. Anderenfalls reicht die Stromversorgung möglicherweise nicht aus, so daß die Steckdose dadurch zu heiß wird oder die Stromversorgung unterbrochen wird. Achten Sie ebenfalls darauf, nicht auf die Druckerkabel zu treten, und stellen Sie auch keine Gegenstände auf diese Kabel.
- Schließen Sie das Erdungskabel auf keinen Fall an eine Gasleitung an, weil in diesem Fall Explosionsgefahr bestehen würde. Bevor Sie das Erdungskabel anschließen oder abtrennen, achten Sie darauf, daß zuvor das Netzkabel aus der Netzsteckdose gezogen wird.
- Schalten Sie die Stromversorgung des Druckers und des Computers aus, bevor Sie Kabel anschließen oder abtrennen. Halten Sie beim Anschließen oder Abtrennen stets Stecker und Kabel. Ziehen oder tragen Sie den Drucker auf keinen Fall an den Kabeln, weil auf diese Weise unzulässige Kräfte auf die Kabel ausgeübt werden.
- Schließen Sie die Anschlußkabel richtig und fest an. Wenn ein Anschluß mit vertauschter Polarität hergestellt wird, werden Komponenten im Drucker oder der angeschlossene Computer möglicherweise beschädigt.
- Verwenden Sie abgeschirmte Leiter oder verdrillte Doppelleiter als Signalleitungen, um Rauscheffekte zu minimieren. Schließen Sie kein Gerät an, das wahrscheinlich viel Rauschen erzeugt.
- Wenn ein Drawer Kic-Anschluß vorgesehen ist, schließen Sie ihn ausschließlich an ein Solenoid an, das über die entsprechenden technischen Daten verfügt. Anderenfalls könnten Probleme entstehen.
- Stellen Sie den Drucker an einem Ort auf, an dem sich eine geeignete Wandsteckdose in der Nähe befindet, so daß Sie den Netzstecker sofort abziehen können, um die Stromversorgung zum Drucker sofort zu unterbrechen, sofern ungewöhnliche Bedingungen entstehen.
- Wenn das Gerät über einen längeren Zeitraum nicht verwendet wird, ziehen Sie den Netzstecker.
- Wenn das Gerät transportiert wird, nehmen Sie die Papierrolle aus dem Gerät.

⚠ VORSICHTSMASSNAHMEN FÜR DIE HANDHABUNG

Beachten Sie die folgenden Vorsichtsmaßnahmen, um den Drucker CBM1000 richtig zu betreiben und um zu verhindern, daß Probleme auftreten.

- Verwenden Sie ausschließlich das vorgeschriebene Netzteil.
- Achten Sie darauf, daß der Drucker nicht druckt, wenn kein Papier eingelegt ist.
- Lassen Sie keine Fremdkörper, wie z. B. Büroklammern, Nadeln oder Schrauben, in den Drucker fallen.
- Verschütten Sie keine Flüssigkeit auf dem Drucker, und sprühen Sie keine Flüssigkeit, die Chemikalien enthält, auf den Drucker.
- Treten Sie nicht gegen den Drucker, schlagen Sie nicht auf den Drucker, und lassen Sie keine anderen Stöße auf den Drucker einwirken.
- Verwenden Sie keine spitzen Gegenstände, wie beispielsweise einen Kugelschreiber, um die Bedienungselemente des Bedienungsfeldes zu betätigen.
- Kleben Sie einzelne Seiten nicht mit Klebestreifen zusammen, um einen Endlosdruck zu ermöglichen.
- Ziehen Sie niemals das Papier, das in den Drucker eingelegt ist, bei geschlossener Abdeckung mit Gewalt heraus.
- Wenn Sie die Abdeckung öffnen/ schließen, achten Sie darauf, daß sich das Papier nicht verfängt.

Achten Sie zur Verhütung von Verletzungen und Beschädigungen auf folgendes:

- Berühren Sie nicht die Druckseite des Druckkopfes.
- Berühren Sie niemals bewegliche Teile im Innern des Druckers, wie beispielsweise Papierschneider, Zahnräder und elektrische Komponenten, solange der Drucker eingeschaltet ist.
- Achten Sie darauf, daß Sie sich keine Verletzungen an den Kanten der Blechkomponenten zuziehen oder andere Gegenstände daran beschädigen.
- Sollten ungewöhnliche Zustände während des Druckerbetriebs eintreten, stoppen Sie den Drucker sofort, und ziehen Sie den Netzstecker aus der Netzsteckdose.
- Beim Öffnen/ Schließen der Druckerabdeckung darauf achten, nicht die Hand oder Finger am Drucker einzuklemmen.
- Überlassen Sie alle erforderlichen Reparaturen Ihrem CBM-Händler (Siehe 9 “WARTUNG UND KUNDENDIENST” Seite 37.) Versuchen Sie auf keinen Fall, den Drucker eigenständig zu demontieren und zu reparieren.

Nachstehend wird ein Warnschild des Druckers beschrieben, das Sie auf eine potentielle Gefahr aufmerksam machen soll. Lesen Sie den Warnhinweis auf diesem Schild, und verhalten Sie sich im Umgang mit dem Drucker entsprechend.

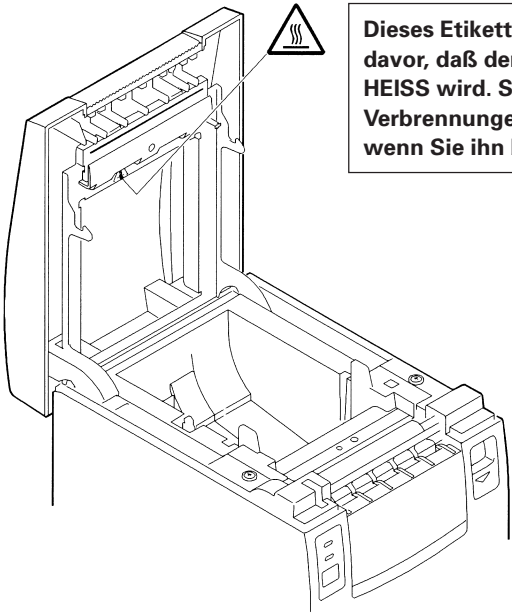

Dieses Etikett warnt Sie davor, daß der Druckkopf HEISS wird. Sie können sich Verbrennungen zuziehen, wenn Sie ihn berühren.

HEISSER BEREICH:

Berühren Sie den Druckkopf nicht, um Verbrennungen zu vermeiden, da er HEISS wird.

ⓘ TÄGLICHE WARTUNGSARBEITEN

- Schalten Sie den Drucker unbedingt aus, bevor Sie Wartungsarbeiten durchführen.
- Wenn Sie die Walze reinigen, verwenden Sie einen in Ethylalkohol getränkten Wattebausch, um Flecken abzuwischen.

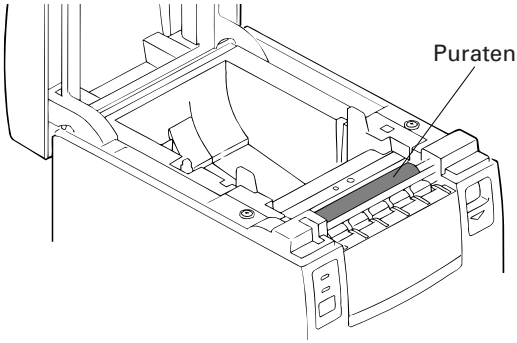

⚠ ACHTUNG:

Vermeiden Sie es, den Druckkopf zu reinigen, wenn gerade ein Druckvorgang beendet worden ist. Der Druckkopf ist HEISS.

- Verwenden Sie ein trockenes weiches Tuch, um Flecken und Staub vom Druckergehäuse abzuwischen.
- Wenn Sie stark verschmutzte Bereiche säubern, verwenden Sie ein Tuch, das in Wasser getaucht und anschließend gut ausgewrungen wurde. Verwenden Sie niemals organische Lösungsmittel, wie beispielsweise Alkohol, Verdünner, Trichlorethylen, Benzol, Keton, oder chemische Entstaubungsmittel.
- Wenn der Drucker mit Papierstaub verschmutzt ist, verwenden Sie eine weiche Bürste, um ihn zu reinigen.

ⓘ TÄGLICHE WARTUNGSARBEITEN

Reinigen des Druckkopfs

1 Schalten Sie die Stromversorgung des Druckers aus.
2 Öfnen Sie die Druckerabdeckung.
3 Verwenden Sie Gaze, die mit etwas Alkohol benetzt ist, um Flecken und Staub auf der Seite des Druckkopfes abzuwischen, die Wärme abstrahlt.

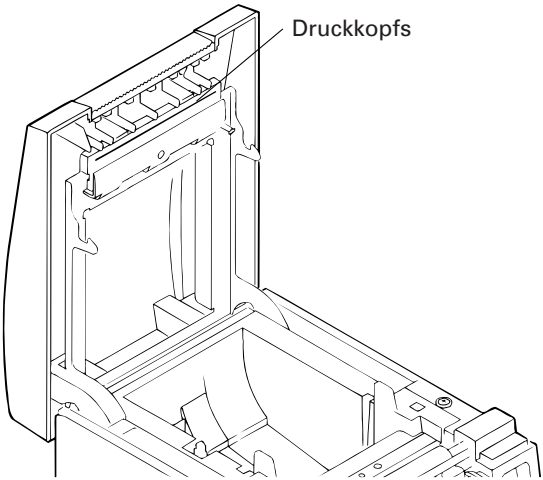

⚠ ACHTUNG:

Vermeiden Sie es, den Druckkopf zu reinigen, wenn gerade ein Druckvorgang beendet worden ist. Der Druckkopf ist HEISS. Berühren Sie die Seite des Druckkopfes, die Wärme abstrahlt, nicht mit bloßen Händen oder mit Metallgegenständen.

4. BETRIEB

4.1 Anschließen des Netzteils und Netzkabels

1 **Schalten Sie die Stromversorgung des Druckers aus.**

2 **Drehen Sie die flache Seite des Netzteilkabelanschlusses nach oben, und stecken Sie den Netzkabelanschluß in den Netzanschluß auf der Rückseite des Druckers. (Nur für Modelle mit externem Netzteil.)**

3 **Verwenden Sie einen Kabelstecker,der in den Netzanschluß paßt und für einen Stromeingangswert des Druckers von 24 V Gleichstrom/1,9 A geeignet ist. (Nur für Modelle mit input Gleichstrom.)**

4 **Schließen Sie das Netzkabel an den Druckereingang oder das Netzteil an, und stecken Sie den Netzkabelstecker in ein geeignete Wandsteckdose.**

CBM1000S (Standardmodell)

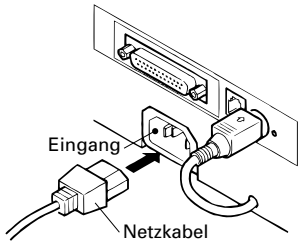

CBM1000A (Externes Netzteil)

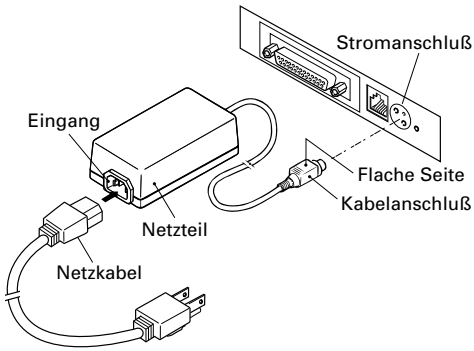

CBM1000D (Input Gleichstrom)

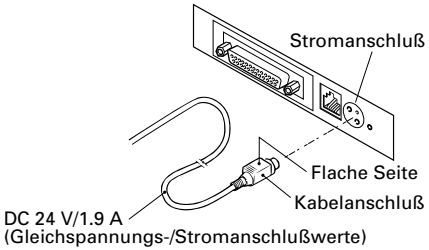

Netzanschlusses:	TCS7960-53-2010 (Hosiden) oder äquivalenter Anschluß
Verwendbarer Anschluß:	TCP8927-63-1100 (Hosiden) oder äquivalenter Anschluß
	TCP8927-53-1100 (Hosiden) oder äquivalenter Anschluß

⚠ ACHTUNG :

- **Verwenden Sie ausschließlich das vorgeschriebene Netzteil.**
- **Wenn Sie den Netzkabelanschluß des Netzteils anschließen oder abtrennen, ziehen Sie immer am Stecker und nicht am Kabel.**
- **Für das Netzteil sollte eine Wandsteckdose verwendet werden, an die keine Geräte angeschlossen sind, von denen Rauschstörungen ausgehen. Vermeiden Sie es, am Netzkabel zu ziehen, weil das Kabel beschädigt werden kann.**
- **Daduch entsteht Brandgefahr oder die Gefahr eines elektrischen Schlags. Darüber hinaus kann das Kabel brechen.**
- **Wenn Sie Donner in der Nähe hören, ziehen Sie das Netzkabel aus der Netzsteckdose. Anderenfalls kann ein Blitz einen Brand oder elektrischen Schlag verursachen.**
- **Verlegen Sie das Netzkabel nie in der Nähe einer Heizung, weil dadurch die Kabelummantelung schmelzen kann, so daß wiederum Brandgefahr oder die Gefahr eines elektrischen Schlags besteht.**
- **Wenn Sie den Drucker über einen längeren Zeitraum nicht verwenden, ziehen Sie das Netzkabel aus Sicherheitsgründen aus der Netzsteckdose.**

4.2 Anschließen der Schnittstellenkabel

1 **Schalten Sie die Stromversorgung des Druckers (Und die Stromversorgung des angeschlossenen Computers) aus.**

2 **Richten Sie das Schnittstellenkabel richtig aus, und schließen Sie es an die entsprechende Schnittstelle an.**

3 **Sichern Sie das Kabel gemäß der Darstellung weiter unten.**
Serielles Schnittstellenkabel: Befestigen Sie den Stecker mit Schrauben.
Paralleles Schnittstellenkabel: Befestigen Sie den Stecker mit den Klammern.

4 **Schließen Sie das andere Ende des Schnittstellenkabels an den Computer an.**

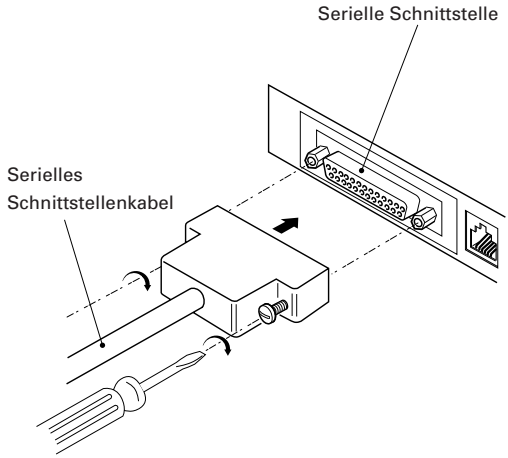

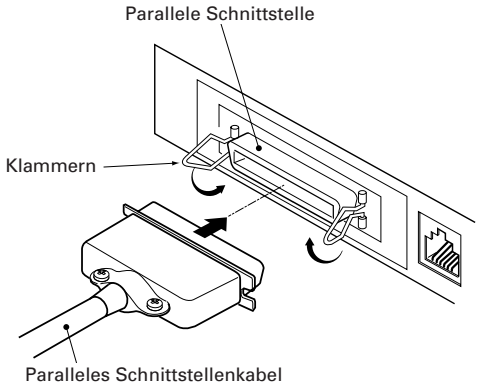

4.3 Anschließen des Drawer Kickout-Steckers

1 **Schalten Sie die Stromversorgung des Druckers aus.**

2 **Richten Sie den Drawer Kickout-Kabelstecker richtig aus, und stecken Sie ihn in den Drawer Kickout-Stecker auf der Rückseite des Druckers.**

3 **Befestigen Sie den Erdungsleiter an der Erdungsklemme am Drucker mit einer Schraube.**

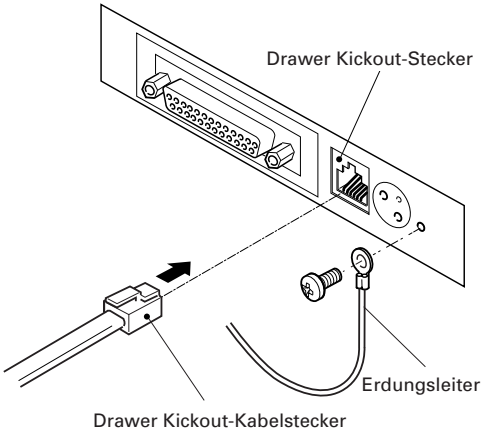

⚠ ACHTUNG:

- **Schließen Sie nur den vorgeschriebenen Drawer (Solenoid) an den Drawer Kickout-Stecker an. (Schließen Sie auch keine Telefonleitung an.)**

4.4 Einlegen / Auswechseln von Papierrollen

1 **Schalten Sie den Drucker ein.**

2 **Drücken Sie den Auswurfhebel in die angezeigte Richtung, um die Druckerabdeckung zu entriegeln.**

3 **Halten Sie die Druckerabdeckung auf beiden Seiten mit den Händen, und öffnen Sie sie bis zum Anschlag.**

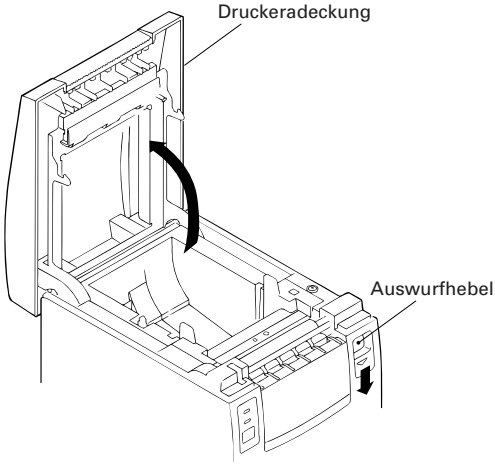

4 **Überprüfen Sie die Wickelrichtung der Papierrolle, und legen Sie sie richtig in den Papierrollenhalter.**

5 **Ziehen Sie das Papierende etwa 5 cm aus dem Druckergehäuse heraus, und schließen Sie anschließend die Druckerabdeckung. Drücken Sie vorsichtig auf den oberen Teil der Abdeckung, bis Sie ein Klickgeräusch hören.**

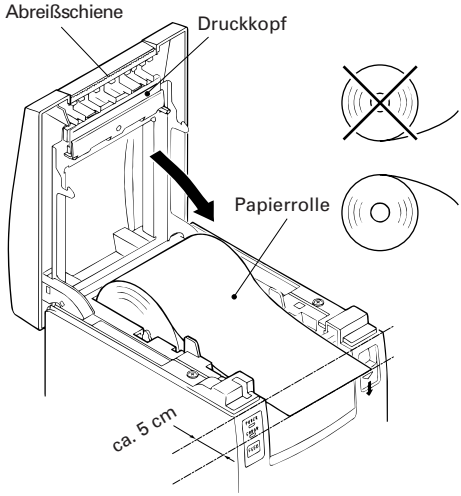

6 **Trennen Sie das überstehende Papier mit Hilfe der Abreißschiene ab. (Manuell papierschneider)**

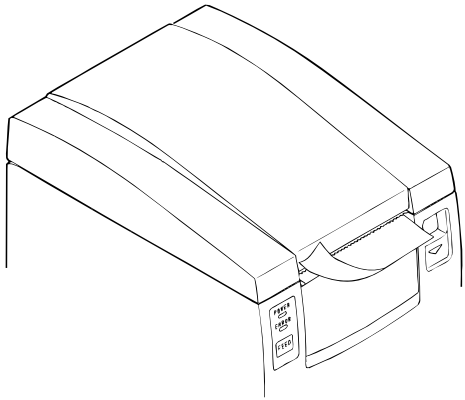

⚠ ACHTUNG :

- **Verwenden Sie stets den vorgeschriebenen Papierrollentyp.**
- **Wenn andere Papierrollentypen verwendet werden, kann die angegebene Druckqualität möglicherweise nicht erzielt oder die Lebensdauer des Druckers reduziert werden.**
- **Wenn Sie die Druckerabdeckung öffnen, versuchen Sie nicht, sie über ihre Anschlagposition hinaus durch Kraftaufwand zu öffnen.**
- **Der Druckkopf ist direkt im Anschluß an den Druckvorgang noch sehr heiß. Berühren Sie ihn nicht mit der Hand.**
- **Öffnen Sie während des Drucks nicht die Druckerabdeckung.**
- **Halten Sie während des Drucks nicht das Ende des bedruckten und ausgegebenen Papiers, weil dadurch ein Papierstau entstehen kann.**

4.5 Justieren des Papierende-Sensors

1 **Öffnen Sie die Druckerabdeckung.**

2 **Drücken Sie den Sensorknopf in Richtung Pfeil 1, um die Klaue auszurücken (Oder den Sensor zu entriegeln), und justieren Sie anschließend den Sensor entsprechend der gewünschten Restpapiermenge innerhalb des Bereichs, der durch Pfeil 2 angezeigt wird.**

3 **In der folgenden Tabelle wird die Beziehung zwischen den Justierungspositionen und der Restpapiermenge aufgelistet. (Grobe Näherung)**

Justierungs-position	Restpapiermenge (Außendurchmesser der Papierrolle in mm)
1	ϕ18
2	ϕ21
3	ϕ24
4	ϕ27

* Bei Verwendung der vorgeschriebenen Papierrollen.

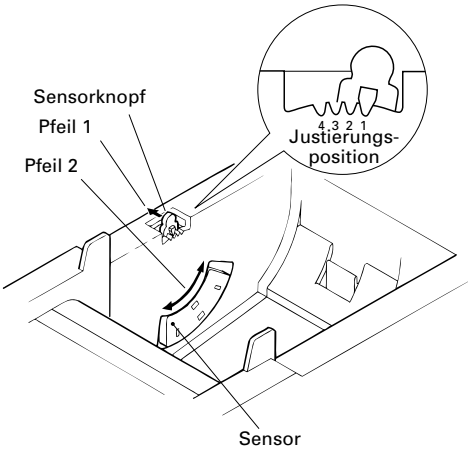

* Der Papierende-Sensor ist unwirksam, wenn das Etikettenpapier verwendet wird.

ACHTUNG:

Verwenden Sie die Restpapiermenge (Außendurchmesser der Papierrolle) lediglich als grobe Näherung, da diese Messung vom jeweiligen Drucker und der verwendeten Papierrolle abhängt.

4.6 Verwenden von 58 mm breiten Papierrollen

1 **Schalten Sie die Stromversorgung des Druckers aus.**

2 **Öffnen Sie die Druckerabdeckung.**

3 **Die zwei Schrauben lösen und die Druckerabdeckung entfernen.**

4 **Die Halteschrauben des Dämpfers lösen, den Dämpfer (11 mm) in Richtung des großen Pfeils ausrichten und dann mit den ursprünglichen Schrauben wieder anbringen.**

5 **Die Druckerabdeckung wieder anbringen.**

6 **Die mitgelieferte Trennvorrichtung wie in der Abbildung gezeigt anbringen.**

7 **Den DIP-Schalter auf 58-mm Rollenpapier einstellen und dazu den Abschnitt "5. EINSTELLEN DER DIP-SCHALTER" zu Rate ziehen.**

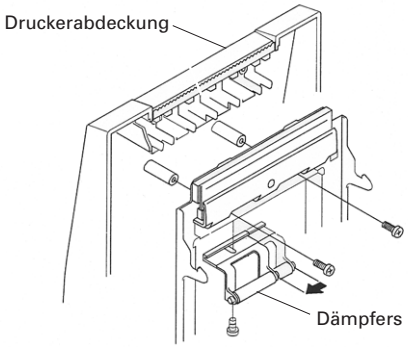

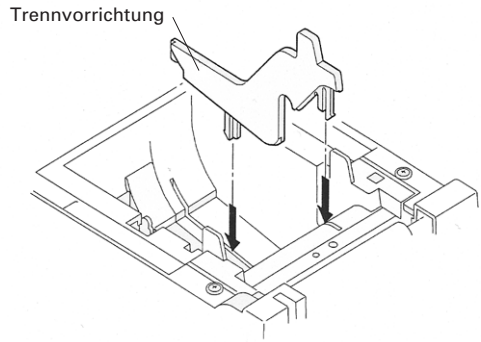

⚠ ACHTUNG:

Während des Druckens die DIP-Schalter nicht von 58-mm auf 80-mm Rollenpapier umschalten.

4.7 Beseitigen von Papierstaus

1 **Schalten Sie die Stromversorgung des Druckers aus.**

2 **Öffnen Sie die Druckerabdeckung.**

3 **Beseitigen Sie den Papierstau und alle restlichen Papierschnitzel. (Nehmen Sie auch die Papierrolle aus dem Halter.)**

4 **Schließen Sie die Druckerabdeckung.**

5 **Schalten Sie den Drucker ein. Der automatische Papierschneider wird initialisiert, und anschließend wird der Alarmzustand gelöscht.**

4.8 Reinigen des Druckkopfes

1 **Schalten Sie die Stromversorgung des Druckers aus.**

2 **Öffnen Sie die Druckerabdeckung.**

3 **Wischen Sie Schmutz, wie beispielsweise Staub und ähnliches, vom Heizelement des Kopfes mit Hilfe eines Wattebausches ab, der mit Ethylalkohol getränkt ist.**

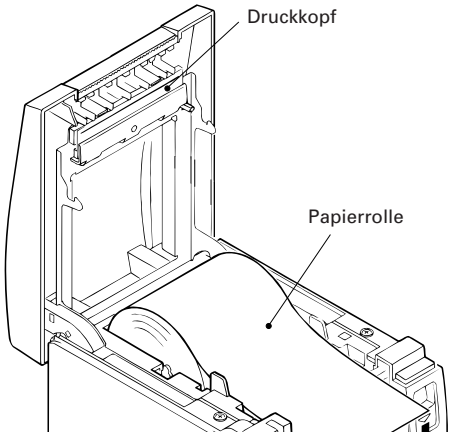

⚠ ACHTUNG:

Der Druckkopf ist sehr heiß, wenn gerade ein Druckvorgang beendet worden ist. Berühren Sie das Heizelement des Druckkopfes nicht mit bloßen Händen oder mit Metallgegenständen.

4.9 Bedienungsfeld und Fehleranzeige

Anzeigeleuchte POWER (Grün)

Diese Anzeigeleuchte leuchtet bei eingeschalteter Stromversorgung. Sie blinkt, wenn ein Speicherfehler aufgetreten ist.

Anzeigeleuchte ERROR (Rot)

Diese Anzeigeleuchte leuchtet oder blinkt, um unterschiedliche Fehlerzustände anzuzeigen. Sie blinkt auch, während der Drucker auf die Ausführung eines Makros wartet. (Weitere Informationen finden Sie die 10.1 “Command List” und “Executing the macro”.)

Fehleranzeige	POWER LED	ERROR LED	Fehlerbehebungsverfahren
Speicherprüfehler	(Blinkt schnell)	Leuchtet	Nicht behebbar.
Abdeckung geöfnet	Leuchtet	Leuchtet	Schließen Sie die Abdeckung.
Überhitzung des Kopfes	Leuchtet	(Blinkt langsam)	Automatische Fehlerbehebung, wenn die Temperatur auf Normalwert zurükgegangen ist.
Papierende fast erreicht	Leuchtet	Leuchtet	Legen Sie eine neue Papierrolle ein.
Papierende	Leuchtet	Leuchtet	Legen Sie eine neue Papierrolle ein.
Motorblockierung des Papierschneiders	Leuchtet	(Blinkt schnell und langsam)	Beseitigen Sie den Papierstau.
Warten auf Makroausfürung	Leuchtet	(Blinkt langsam)	Drüken Sie die Taste FEED.
Tiefelektrische-potentialfehler	Leuchtet	Leuchtet	Nicht behebbar.
Hochelektrische-potentialfehler	Leuchtet	(Blinkt schnell und langsam)	Nicht behebbar.
Warten auf Etikettschneider	Off	(Blinkt)	Drüken Sie die Taste FEED.
Etikettdetektionsfehlerr	Off	(Blinkt langsam)	Angewiesene Etikettrolle laden.

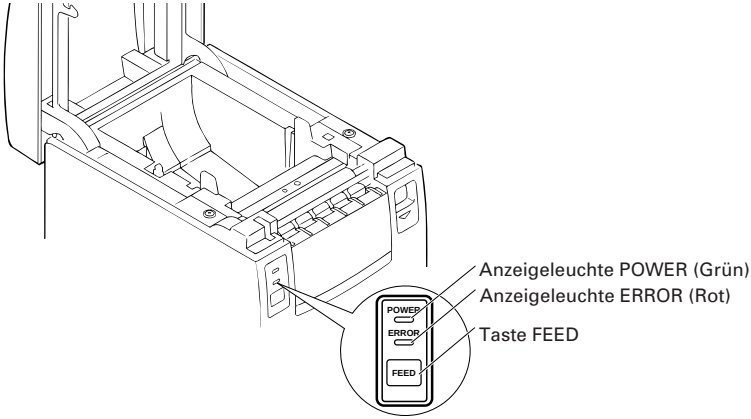

Fehlerbeschreibung

Abdeckung geöffnet: Wenn Sie die Druckerabdeckung öffnen, wird der Sensor aktiviert, der erkennt, wenn die Abdeckung geöffnet ist. Durch diesen Sensor werden die LED ERROR eingeschaltet und der Druckvorgang gestoppt.

Überhitzung des Kopfes: Um den Druckkopf vor Üerhitzung zu schützen, wird der Sensor für die Druckkopftemperatur aktiviert, wenn die Temperatur des Druckkopfes über ca. 65°C ansteigt. Die LED ERROR blinkt, und der Druckvorgang wird gestoppt. Der Druckvorgang wird wiederaufgenommen, wenn die Temperatur des Druckkopfes unter etwa 60°C sinkt.

Papierende fast erreicht: Wenn der Durchmesser der Papierrolle abnimmt, wird der Sensor aktiviert, der erkennt, daß das Ende der Papierrolle fast erreicht ist. Anschließend wird die LED ERROR eingeschaltet, die anzeigt, daß der Papiervorrat nur noch gering ist. (Weitere Informationen finden Sie unter “Selecting the Paper Near-end Sensor valid for a paper end signal output” und “Selecting the Paper Near-end Sensor valid for print stop“ in der 10 “PRINT CONTROL FUNCTIONS”.)

Papierende: Wenn die Papierrolle aufgebraucht ist, erkennt der Sensor, der in der Nähe des Druckkopfes über dem Papierweg angebracht ist, das Ende der Papierrolle. Anschließend wird die LED ERROR eingeschaltet, und der Druckvorgang wird gestoppt. (Weitere Informationen finden Sie unter “Selecting the Paper Near-end Sensor valid for a paper end signal output” und “Selecting the Paper Near-end Sensor valid for print stop“ in der 10 ”PRINT CONTROL FUNCTIONS”.)

Motorblockierung des Papierschneiders: Wenn der Sensor, der die Position des Papierschneiders innerhalb der Schneideeinheit erkennt, etwa 1 Sekunden oder länger AKTIVIERT oder DEAKTIVIERT bleibt, entscheidet der Drucker, daß der Motor blockiert ist. Daraufhin

werden der Papierschneider und der Druckvorgang gestoppt. (Weitere Informationen finden Sie unter 4.7 “Beseitigen von Papierstaus”.)

Tiefelektrischepotentialfehler: Tritt auf, wenn die im Drucker vorliegende Spannung abnimmt. Wenn dieser Fall eintreten sollte, schalten Sie die Stromversorgung unverzüglich aus.

Hochelektrischepotentialfehler: Tritt auf, wenn die im Drucker vorliegende Spannung zunimmt. Wenn dieser Fall eintreten sollte, schalten Sie die Stromversorgung unverzüglich aus.

Warten auf Etikettschneiden: Warten, bis das per GS+FF-Befehl (Etikett schneiden & abgeben) ausgegebene Etikett mit der manuellen Schneideeinrichtung geschnitten und der FEED-Schalter gedrückt wurde.

Etikettdetektionsfehler: Keine Etikettzwischenräume oder schwarzen Markierungen erfassbar, oder die verwendeten Etikettbögen entsprechen nicht den angewiesenen Längenmaßen.
Wenn ein Etikettdetektionsfehler auftritt, obwohl die verwendeten Etikettbögen den angewiesenen Längenmaßen entsprechen, ist wahrscheinlich der Sensor oder dessen Peripherieelektronik defekt. Der Drucker geht in den Besetztzustand.

Taste FEED

- Wenn Sie diese Taste einmal kurz drücken, wird das Papier um eine Zeile vorgeschoben. Wenn Sie die Taste länger drücken, wird das Papier kontinuierlich vorgeschoben.
- Wenn der Schalter gedrückt wird, während der Drucker auf die Ausführung eines Makros wartet, wird der Makro ausgeführt.

Taste FEED und Schalter POWER

Wenn Sie den Schalter POWER drücken, während Sie die Taste FEED gedrückt halten, wird der Eigendrucktest ausgeführt.

Summer-Hinweistöne

Wenn einer der nachstehenden Druckerfehler auftritt, ertönt der Summer und die ERROR-LED leuchtet auf.

1. Papierende (PE) oder Abdeckung offen
   Viermaliges kurzes Piepsen in zwei Zyklen mit 0,5 Sek. Intervall.
2. Ca. 1 Sek. lang ertönt ein anhaltender Pieps - und Piepton.

4.10 Hexdump

Funktion zur Erstellung eines hexadezimalen Speicherauszugs
Mit dieser Funktion können Daten, die vom Computer gesendet werden, in Hexadezimalzahlen sowie in Zeichen gedruckt werden, die diesen Zahlen entsprechen.

Starten des Hexdump

1 **Öffnen Sie die obere Abdeckung.**

2 **Halten Sie die Taste FEED gedrückt, und schalten Sie dabei die Stromversorgung des Druckers "①" ein.**

3 **Wenn Sie die Abdeckung "②" schließen, wird die Meldung "Hexadecimal Dump" gedruckt, und anschließend werden die empfangenen Daten, als Hexadezimalzahlen und den entsprechenden Zeichen gedruckt.**
- **Wenn für einzelnen Daten kein Zeichen zur Verfügung steht, wird statt dessen " . " gedruckt.**
- **Während des Hexdump stehen nur die Funktionen DLE EOT und DLE ENQ zur Verfügung.**
- **Wenn die empfangenen Daten nicht für eine ganze Zeile ausreichen, brauchen Sie lediglich die Taste FEED zu drücken, um die Zeile zu drucken.**

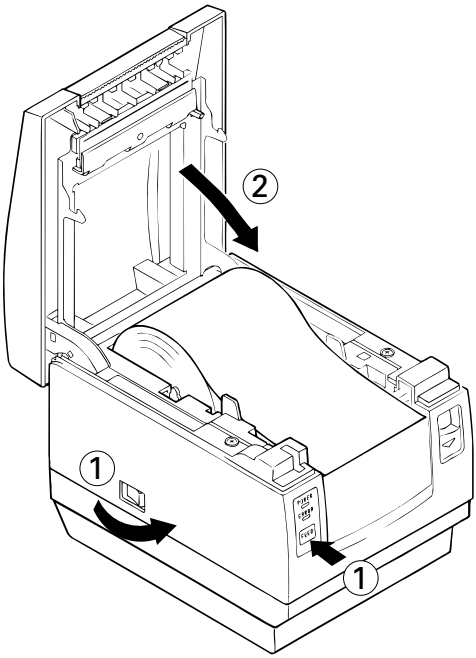

Beenden des Hexdump

4 **Nach dem Druck der Hexadezimalzahlen wird die Funktion beendet, wenn Sie die Stromversorgung ausschalten oder wenn ein Rücksetzungssignal von der Schnittstelle empfangen wird.**

<Beispiel eines Hexdump>

```
=== Hexadecimal Dump ===
19 40 08 09 08 09 08 09 08 09   .@........
08 09 30 30 68 20 70 69 20 31   ..00h pi 1
60 68 09 19 21 00 20 21 20 21   `h..!. ! !
20 21 20 21 28 29 28 29 A9 29    ! !()()-)
28 29 30 31 30 31 30 31 30 31   ()01010101
```

5. EINSTELLEN DER DIP-SCHALTER

5.1 Position der DIP-Schalter

Führen Sie die folgenden Schritte aus, um auf die DIP-Schalter zuzugreifen:

1 **Schalten Sie die Stromversorgung des Druckers aus.**

2 **Öffnen Sie die Druckerabdeckung.**

3 **Nehmen Sie die Papierrolle heraus.**

4 **Ziehen Sie an der Zunge des DIP-Schalterdeckels (Um ihn zu entriegeln), und nehmen Sie anschließend den Deckel heraus.**

5 **Näheres zum Ändern der Einstellungen finden Sie auf den nachfolgenden Seiten.**

6 **Schalten Sie nach dem Ändern der Einstellungen die Stromversorgung ein. Die neuen Einstellungen sind nun aktiviert.**

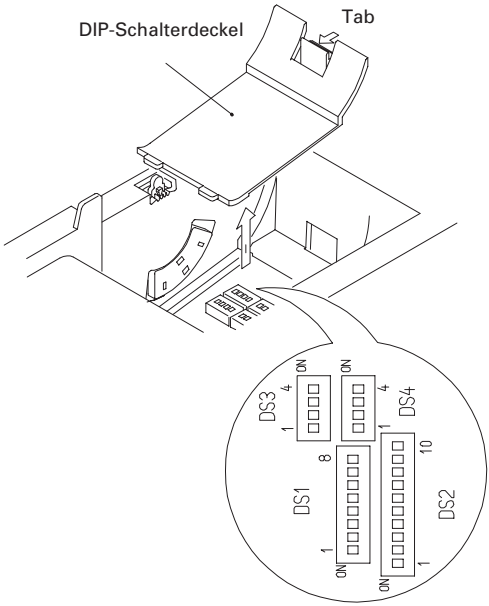

5.2 DIP-Schaltertabelle

DIP-Schalter 1

No.	Funktion	ON	OFF	Werkseinstellungen
1	Automatischer Papierschneider	Verfügbar	Nicht verfügbar	ON
2	Nicht verwendet	—	—	OFF
3	Papierbreite	58 mm	80 mm	OFF
4	Druckspalten *	42(80 mm) columns 30(58 mm) columns	48(80 mm) columns 36(58 mm) columns	OFF
5	CR-Modus	LF-Betrieb	Ignoriert	OFF
6	Eingangspufferspeicher	72 Byte	4K Byte	OFF
7	Druckdichte (Vgl. nachstehende Tabelle)			ON
8				OFF

*: Er kann je nach Einstellung von Papierbreite (DS1-3) und Schriftart A, B anders angeordnet sein.

Druckdichte (DIP-Schalter 1)

Druckdichte / No.	Stufe 1 (Licht)	Stufe 2 (Standard)	Stufe 3 (Schmächtigdunkel)	Stufe 4 (Dunkel)
7	OFF	ON	OFF	ON
8	OFF	OFF	ON	ON

Hinweis: Wenn als Druckdichte Stufe 2 (Level 2) oder höher gewählt wird, verringert sich möglicherweise die Druckgeschwindigkeit.

DIP-Schalter 2

No.	Funktion	ON	OFF	Werkseinstellungen
1	Zeichencode	Vgl. nachstehende Tabelle.		OFF *
2	Zeichencode			OFF *
3	Zeichencode			OFF *
4	Zeichencode			OFF *
5	JIS/Umschalt-JIS	Umschalt-JIS	JIS	OFF
6	Bedingung für BUSY-Signal	Eingangspuffer-speicher voll	• Offline • Eingangspuffer-speicher voll	OFF
7	Verwendetes Papier	Thermo-Etikettpapier	Thermopapier	OFF
8	Detektion	Schwarze Markierung	Etikettabstand	OFF
9	Etikettlänge-Einstellung	Befehl	Auto	OFF
10	Nicht rerwendet	—	—	OFF

*: Länderabhängig

Wählen der Zeichencodetabellen (DIP-Schalter 2)

No. / Code seite	1	2	3	4
Codeseite PC437 (USA, Europäer Standard)	OFF	OFF	OFF	OFF
Codeseite Katakana (Japanisch)	ON	OFF	OFF	OFF
Codeseite PC850 (Multilingual)	OFF	ON	OFF	OFF
Codeseite PC860 (Portuguese)	ON	ON	OFF	OFF
Codeseite PC863 (Canadian-French)	OFF	OFF	ON	OFF
Codeseite PC865 (Nordic)	ON	OFF	ON	OFF
Codeseite PC852 (Slawisch)	OFF	ON	ON	OFF
Codeseite PC866 (Russiach)	ON	ON	ON	OFF
Codeseite PC857 (Türkisch)	OFF	OFF	OFF	ON
Windows Codeseite	ON	OFF	OFF	ON
Nicht definiert	—	—	—	—
•	—	—	—	—
Leere Seite	ON	ON	ON	ON

Leerseiten sind Bereiche für Benutzerdefinitionen, die standardmäßig leer sind (Leerzeichen). Wird “Katakana“ aktiviert, wird der internationale Zeichensatz für Japanisch eingerichtet.

DIP-Schalter 3

No.	Funktion	ON	OFF	Werkseinstellung
1	Bitlänge	7-Bit	8-Bit	OFF
2	Parität	Verfügbar	Nicht verfügbar	OFF
3	Ungerade/Gerade	Gerade Zahl	Ungerade Zahl	OFF
4	Kommunikationsmodus	XON/XOFF	DTR/DSR	OFF

DIP-Schalter 4

No.	Funktion	ON	OFF	Werkseinstellung
1	Baud-Rate	Vgl. nachstehende Tabele.		OFF
2	Baud-Rate			ON
3	DSR	Rücksetzung	DSR	OFF
4	INIT	Rücksetzung	—	OFF

Baud-Rate (DIP-Schalter 4)

No. / Baud-Rate	1	2
2400	OFF	OFF
4800	ON	OFF
9600	OFF	ON
19200	ON	ON

6. PARALLELE SCHNITTSTELLE

6.1 Bidirektionale parallele Schnittstelle (IEEE1284)

6.1.1 Kompatibilitätsmodus (Host → Druckerkommunikation: Centronics-kompatibel)

• Allgemeine Beschreibung
Dieser Drucker bietet den Kompatibilitätsmodus, der die Centronics-Schnittstelle spezifiziert, die konventionell für eine Vielzahl von Anwendungen verwendet wird.

• Technische Daten

Datenübertragungsverfahren:	8-Bit parallel
Synchronisierungsverfahren:	Steuerung durch externes Hinweissignal
Handshaking:	Steuerung über nAck- und Busy-Signal
Signalpegel:	Alle Signale sind TTL-kompatibel.

6.1.2 Reverse-Modus (Drucker → Hostkommunikation)

Die Datenübertragung vom Drucker zum Computer erfolgt im Nibble- oder Byte-Modus. (Weitere Einzelheiten hierzu entnehmen Sie bitte “APPENDIX 2. BI DIRECTIONAL PARALLEL INTERFACE”.)

Kurzbeschreibung

Der Reverse-Modus wurde entwickelt, um die Datenübertragung von einem asynchronen Drucker zu verwalten, der von einem Computer angesteuert wird. Im Nibble-Modus werden Daten in Einheiten von 4-Bit (Einem Nibble) über traditionelle Steuerleitungen übertragen. Im Byte-Modus werden Daten über 8-Bit-Datenleitungen bidirektional übertragen. Beachten Sie, daß beide Betriebsarten nicht gleichzeitig mit dem Kompatibilitätsmodus zusammenarbeiten können. Es ist aus diesem Grund nur eine Halbduplexübertragung möglich. (Weitere Einzelheiten entnehmen Sie bitte “APPENDIX 2. BIDIRECTIONAL PARALLEL INTERFACE”.)

6.1.3 Belegung der Anschlußstifte

Der	Quelle	KompatibilitätsModus	Nibble-Modus	Byte-Modus
1	Host	nStrobe	HostClk	HostClk
2	Host/Ptr	Data0(LSB)	Data0(LSB)	Data0(LSB)
3	Host/Ptr	Data1	Data1	Data1
4	Host/Ptr	Data2	Data2	Data2
5	Host/Ptr	Data3	Data3	Data3
6	Host/Ptr	Data4	Data4	Data4
7	Host/Ptr	Data5	Data5	Data5
8	Host/Ptr	Data6	Data6	Data6
9	Host/Ptr	Data7(MSD)	Data7(MSD)	Data7(MSD)
10	Printer	nAck	PtrClk	PtrClk
11	Printer	Busy	PtrBusy/Data3.7	PtrBusy
12	Printer	PEerror	AckDataReq/Data2.6	AckDataReq
13	Printer	Select	Xflag/Data1.5	Xflag
14	Host	nAutoFd	HostBusy	HostBusy
15		NC	ND	ND
16		GND	GND	GND
17		FG	FG	FG
18	Printer	+5V	+5V	+5V
19		GND	GND	GND
20		GND	GND	GND
21		GND	GND	GND
22		GND	GND	GND
23		GND	GND	GND
24		GND	GND	GND
25		GND	GND	GND
26		GND	GND	GND
27		GND	GND	GND
28		GND	GND	GND
29		GND	GND	GND
30		GND	GND	GND
31	Host	nInit	nInit	nInit
32	Printer	nFault	nDataAvail/Data0.4	nDataAvail
33		GND	ND	ND
34	Printer	DK_STATUS	ND	ND
35	Printer	+5V	ND	ND
36	Host	nSelectIn	1284-Active	1284-Active

NC: Nicht angeschlossen
ND: Nicht definiert

Verwendbare Anschlüsse

Druckerseitig: 57LE-40360 (Amphenol) oder äquivalente Anschlüsse
Kabelseitig: 57-30360 (Amphenol) oder äquivalente Anschlüsse

⚠ ACHTUNG:

- **Wenn der erste Buchstabe eines Signalnamens mit “n” beginnt, bedeutet dies, daß das Signal im Tiefpegelzustand aktiv ist.**
- **Wenn eines der obigen Signale nicht zur Verfügung steht, läßt sich keine bidirektionale Kommunikation durchführen. Verwenden Sie für Schnittstellensignale verdrillte Doppelleitungen als Signalleitungen.**
- **Die Antwortseite muß an Signalerde angeschlossen sein.**
- **Alle Schnittstellenbedingungen werden entsprechend C-MOS-Pegel angegeben und müssen die folgenden Kenndaten erfüllen. Geben Sie die Anstiegs- und Abfallzeiten jedes Signals mit 0,5 µs an.**
- **Daten sollten nicht übertragen werden, wenn die Signale nAck und Busy ignoriert werden. Anderenfalls werden Daten möglicherweise gelöscht.**
- **Die Schnittstellenkabel müssen so kurz wie möglich sein.**

6.2 Beschreibung von Eingangs- und Ausgangssignalen

6.2.1 Eingangs- und Ausgangssignale

Druckereingangssignale

- DATA: 8-Bit-Parallelsignal. (Aktiv im Hochpegelzustand)
- nStrobe: Hinweissignal zur Unterstützung des Lesevorgangs von 8-Bit-Daten. (Aktiv im Tiefpegelzustand)
- nInit: Signal zum Rücksetzen aller Druckerfunktion. (Aktiv im Tiefpegelzustand)
- nSelectIn: Dieses Signal wechselt in den Hochpegelzustand, wenn der Drucker in den IEEE 1284-Modus geschaltet wird.

Druckerausgangssignale

- nAck: 8-Bit-Datenanforderungssignal, das nach einem Busy-Signal ausgegeben wird. (Aktiv im Tiefpegelzustand)
- Busy: Mit diesem Signal wird angezeigt, daß der Drucker belegt ist. Neue Daten können übertragen werden, wenn dieses Signal in den Tiefpegelzustand wechselt. (Aktiv im Hochpegelzustand)
- nFault: Dieses Signal wechselt bei aktivem Alarm in den Tiefpegelzustand. Zu diesem Zeitpunkt werden alle Steuerkreise im Drucker deaktiviert. (Aktiv im Tiefpegelzustand)
- PEerror: Dieses Signal zeigt an, daß der Papiervorrat bald erschöpft ist oder daß das Papier vollständig verbraucht ist. (Aktiv im Hochpegelzustand)
- DK_STATUS: Dieses Signal wechselt in den Hochpegelzustand, wenn der Schalter geöffnet ist, und in den Tiefpegelzustand, wenn er geschlossen ist.

Stromversorgungssignal

- +5 V: 5-V-Signal, das von einem 3,3 kΩ-Widerstand gesteuert wird.
- GND: Gemeinsame Erde für Schaltkreise.

6.2.2 Elektrische Kenndaten

Eingangssignalpegel (nStrobe, DATA 0-7)

Alle Eingangssignale entsprechen dem C-MOS Pegel.
Hochpegel: maximal 4,0 V
Tiefpegelzustand: maximal 0,9 V

Ausgangssignalpegel

Alle Ausgangssignale entsprechen dem C-MOS Pegel.
Hochpegel: maximal 2,4 V
Tiefpegelzustand: maximal 0,4 V

Eingangs- und Ausgangsbedingungen

Alle Eingangssignale (DATA 0-7) werden jeweils über einen 50 kΩ-Widerstand gesteuert, und die anderen Eingangssignale werden über einen 3,3 kΩ-Widerstand gesteuert.

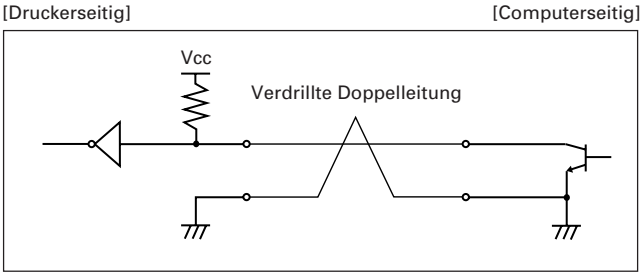

Alle Ausgangssignale (DATA 0-7) werden jeweils über einen 50 kΩ-Widerstand gesteuert, und die anderen Ausgangssignale werden über einen 3,3 kΩ-Widerstand gesteuert.

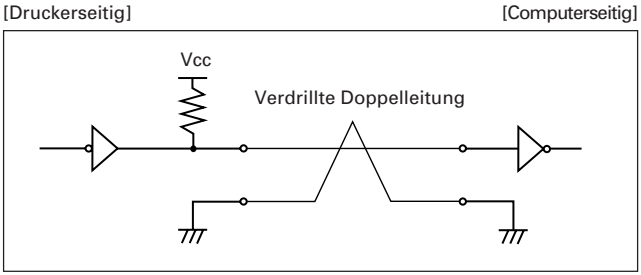

6.2.3 Timing-Tabelle (KompatibilitätsModus)

Timing von Dateneingang und Datendruck

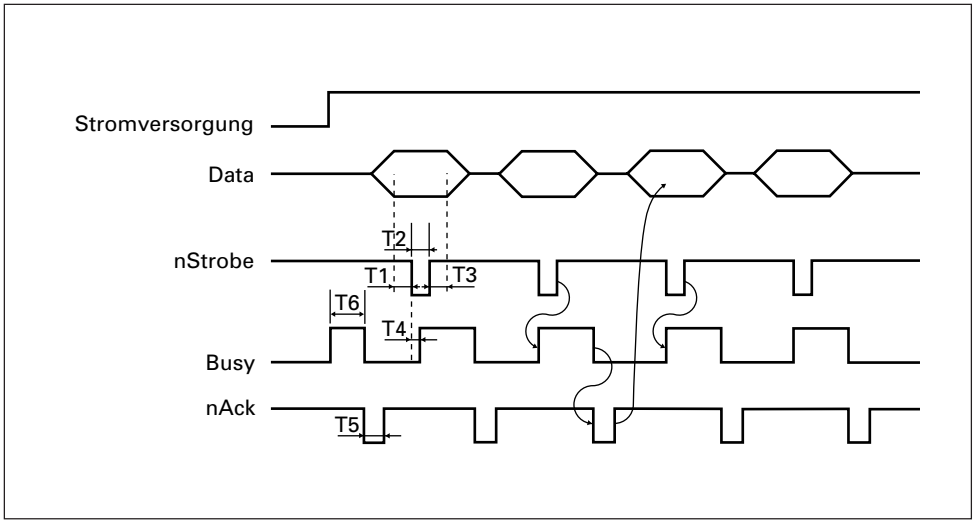

T1, T2, T3:	minimal 0,5 µs
T4:	maximal 270 ns
T5:	typischerweise 2,3 µs
T6:	minimal 500 ms (Beim Einschalten der Stromversorgung)

6.2.4 Datenempfangssteuerung

Wenn sich das Busy-Signal im Tiefpegelzustand befindet, kann der Drucker Daten vom Computer empfangen. Wenn sich das Signal jedoch im Hochpegelzustand befindet, ist ein Datenempfang nicht möglich.

6.2.5 Datenpufferspeicher

Da der Drucker über einen Datenpufferspeicher von 4K verfügt, steht der Computer sofort für andere Aufgaben zur Verfügung.

7. SERIELLE SCHNITTSTELLE

7.1 Technische Daten

(1) Systemsynchronisierung

Asynchron

(2) Baud-Rate

2400, 4800, 9600 oder 19200 Bit/s (Vom Benutzer wählbar)

(3) Konfiguration eines Wortes

Startbit: 1-Bit
Datenbit: 7 oder 8-Bit (Vom Benutzer wählbar)
Paritätsbit: ungerade, gerade, keines (Vom Benutzer wählbar)
Stoppbit: 1-Bit oder mehr

(4) Signalpolarität

RS-232C
• Markierung = Logisch 1 (–3 V bis –12 V)
• Leerzeichen = Logisch 0 (+3 V bis +12 V)

(5) Empfangene Daten (RD-Signal)

RS-232C
• Markierung = 1
• Leerzeichen = 0

(6) Empfangssteuerung (DTR-Signal)

RS-232C
• Markierung: Datenübertragung ist deaktiviert
• Leerzeichen: Datenübertragung ist aktiviert

(7) Übertragungssteuerung (TD-Signal)

DC1-Code (11H) X-ON: Datenempfang wurde aktiviert
DC3-Code (13H) X-OFF: Datenempfang wurde deaktiviert

7.2 Belegung der Anschlußstifte

No.	Signalname	Eingang/Ausgang	Funktion
1	FG	—	Sicherheitserdung
2	TD	Ausgang	Übertragene Daten
3	RD	Eingang	Empfangene Daten
4	RTS	Ausgang	Identisch mit DTR
6	DSR	Eingang	DSR oder RESET (mit DIP-Schalter wählbar)
7	GND	—	Signalerde
20	DTR	Ausgang	BUSY-Signal des Druckers
25	INIT	Eingang	Rücksetzung (mit DIP-Schalter gewählt)

Verwendbare Anschlüsse (D-Sub-Anschlüsse)
Druckerseitig: 17LE-13250 (DDK) oder äquivalente Anschlüsse
Kabelseitig: 17JE-23250 (DDK) oder äquivalente Anschlüsse

ACHTUNG :

- **Die RS-232C-Signale basieren auf EIA RS-232C.**
- **Solange keine Daten übertragen werden, sollten die empfangenen Daten im Markierungszustand gehalten werden.**

7.3 Beschreibung der Eingangs- und Ausgangssignale

7.3.1 Eingangs- und Ausgangssignale

(1) RD

Hierbei handelt es sich um ein serielles Empfangsdatensignal. Wenn ein DÜ-Blockfehler, Überlauffehler oder Paritätsfehler auftritt, werden die fehlerhaften Daten so geduruckt: “?”.

(2) DTR, RTS

Bei entsprechendem Signal können Sie Daten oder Befehle in den Eingangspufferspeicher schreiben. Wenn Sie während eines BUSY-Signals einen Schreibversuch unternehmen, tritt ein Überlauffehler fehlt auf, und die zuvor übertragenen Daten werden ignoriert. Daten können auch beim Drucken in den Eingangspufferspeicher geschrieben werden. Ein BUSY-Signal wird auch beim Einschalten des Druckers, während des Testdrucks, bei Online-Kommunikationen und beim Rücksetzen gesendet.

(3) TD

Wenn Daten empfangen werden, verringert sich die restliche Aufnahmekapazität des Druckereingangspufferspeichers. Wenn die Aufnahmekapazität unter 128 (10) Byte sinkt, wird ein DC3-Signal (13H) an den Computer gesendet (dieses Signal zeigt an, daß der Datenempfang deaktiviert wurde). Wenn die Aufnahmekapazität des Eingangspufferspeichers auf 256 (20) Byte oder mehr ansteigt, wird andererseits ein DC1-Signal (11H) an den Computer gesendet (dieses Signal zeigt an, daß der Datenempfang aktiviert wurde).

Hinweis: Die Werte in Klammern gelten für den Fall, daß eine Größe von 72 Byte für den Eingangspufferspeicher mit Hilfe der DIP-Schalter ausgewählt wurde.

(4) DSR

Wenn die Steuerung per DTR/DSR aktiviert ist, überträgt der Computer während der Übertragung von Statusinformationen Daten an den Drucker, nachdem er geprüft hat, daß es sich bei diesem Signal um ein Leerzeichen handelt. Wenn die Steuerung per DTR/DSR nicht aktiviert ist, ignoriert der Computer dieses Signal und sendet Daten an den Drucker. Dieses Signal kann auch als Rücksetzungssignal nach Ändern der DIP-Schalterstellung verwendet werden (siehe 5.2 “DIP-Schaltertabelle”). Wenn die Pulsbreite des Signals 1 ms oder länger beträgt, wird eine Rücksetzungssignal übertragen.

(5) INIT

Dieses Signal kann als Rücksetzungssignal verwendet werden, nachdem Sie die Stellung des entsprechenden DIP-Schalters geändert haben (siehe 5.2 “DIP-Schaltertabelle”). Wenn die Pulsbreite des Signals im Leerzeichenzustand 1 ms oder länger beträgt, wird ein Rücksetzungssignal übertragen.

(6) FG

Hierbei handelt es sich um ein Massesignal.

(7) GND

Hierbei handelt es sich um die gemeinsame Erde von Schaltkreisen.

7.3.2 Fehlererkennung

Dieser Drucker kann Paritätsfehler, DÜ-Blockfehler und Überlauffehler erkennen. Wenn ein Fehler erkannt wird, werden die fehlerhaften Daten im Pufferspeicher als “?” gespeichert.

(1) DÜ-Blockfehler

Wenn ein Leerzeichenzustand zum Zeitpunkt einer Stoppbiterkennung erkannt wird, ist ein Fehler aufgetreten. Die fehlerhaften Daten werden im Pufferspeicher als “?” gespeichert.

(2) Paritätsfehler

Wenn bei der Paritätsprüfung von Daten Fehler erkannt werden, sofern die Paritätsprüfung aktiviert wurde, werden die fehlerhaften Daten im Pufferspeicher als “?” gespeichert.

(3) Überlauffehler

Wenn ein Überlauffehler erkannt wird, werden die fehlerhaften Daten im Pufferspeicher als “?” gespeichert.

7.3.3 Datenempfangssteuerung

Wenn die Steuerung per DTR/DSR aktiviert ist und das DTR-Signal in den Tiefpegelzustand wechselt, kann der Drucker Daten vom Computer empfangen. Wenn das Signal allerdings im Hochpegelzustand anliegt, kann der Drucker keine Daten empfangen. Wenn die Steuerung per DTR/DSR nicht aktiviert ist, empfängt der Drucker Daten vom Computer, nachdem das X-ON-Signal gesendet wurde. Der Drucker kann aber keine Daten vom Computer empfangen, nachdem ein X-OFF-Signal gesendet wurde.

7.3.4 Pufferung

Wenn Daten an den Eingangspufferspeicher übertragen werden, werden das DTR- und das TD-Signal als Steuersignale verwendet.

- Weitere Informationen zum DTR-Signal entnehmen Sie Punkt 7.3.1 (2).
- Weitere Informationen über das TD-Signal entnehmen Sie Punkt 7.3.1 (3).

7.3.5 Elektrische Kenndaten

RS-232C-Schaltkreis

Eingang (RD, DSR, INIT)

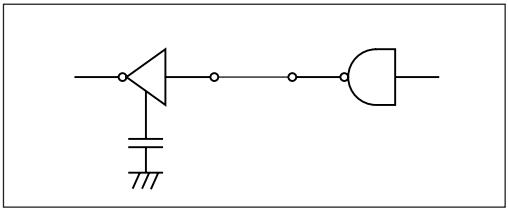

Äquivalent zu MAXIMUM232

Ausgang (DTR, TD, RTS)

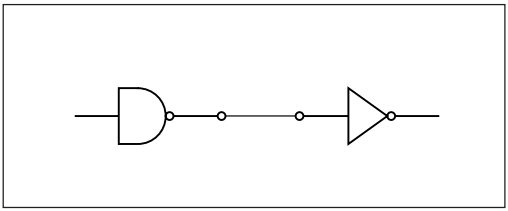

Äquivalent zu MAXIMUM232

8. DRAWER KICKOUT-ANSCHLUSS UND STROMANSCHLUSS

8.1 Technische Daten des Drawer KickOut-Anschlusses

8.1.1 Drawer KickOut-Treibersignal

Ein Impuls (ESC p) wird gesendet. Im Parallelmodus kann der SW(+)-Zustand an Stift 34 des Schnittstellenanschlusses oder durch die Befehle EOT, GS a und GS r an der seriellen/parallelen Schnittstelle überprüft werden.

8.1.2 Elektrische Kenndaten

- Steuerspannung: 24 V DC
- Steuerstrom: maximal 0,8 A (Innerhalb von 510 ms)
- SW-Signal: Signalpegel im Tiefpegelzustand = 0 bis 0,5 V, im Hochpegelzustand = 3 V bis 5 V

8.1.3 Belegung der Anschlußstifte

No.	Signal	Function
1	FG	Frame Ground
2	DRAWER 1	Drawer 1 drive signal
3	DRSW	Drawer switch input
4	VDR	Drawer drive power supply
5	DRAWER 2	Drawer 2 drive signal
6	GND	Common ground on circuits

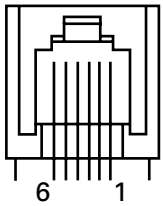

Verwendeter Anschluß: TM5RJ3-66 (Hirose) oder äquivalenter Anschluß
Verwendbarer Anschluß: TM3P-66P (Hirose) oder äquivalenter Anschluß

ACHTUNG:

- **Während des Drucks wird kein Ausgangssignal gesendet.**
- **Drawer 1 und 2 können nicht gleichzeitig angesteuert werden.**
- **Ein Solenoid, das für den Drawer verwendet wird, sollte 36 Ω oder mehr aufweisen. Der Ausgangsstrom sollte bei 0,8 A oder weniger gehalten werden. Anderenfalls könnte ein Defekt oder Brand entstehen.**
- **Dieser Anschluß darf nicht an eine Telefonleitung angeschlossen werden. Schließen Sie ihn ausschließlich an Salenoid.**

8.1.4 Treiberschaltung

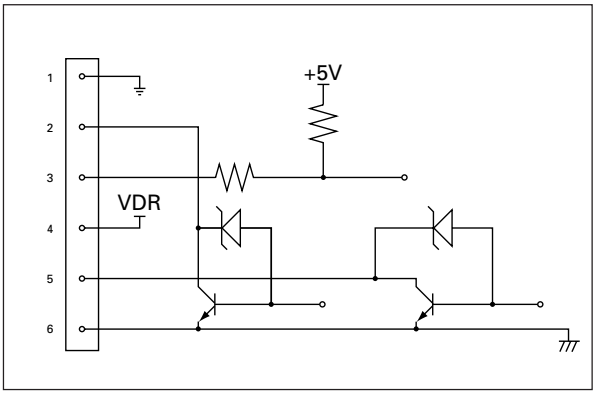

8.2 Technische Daten des Stromanschlusses

Nachstehend ist der Stromanschluß des speziellen Netzteils dargestellt.

Stiftbelegung des Netzanschlusses
(Stiftnummer und Funktion)

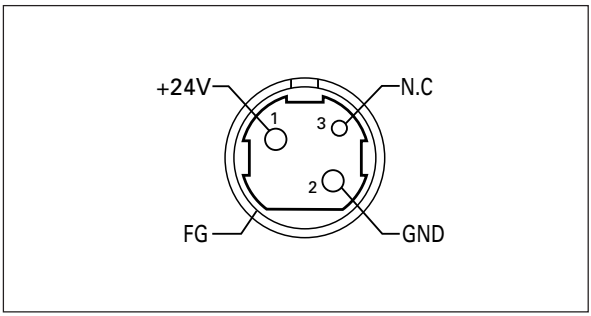

Netzanschlusses:	TCS7960-53-2010 (Hosiden) oder äquivalenter Anschluß
Verwendbarer Anschluß:	TCP8927-63-1100 (Hosiden) oder äquivalenter Anschluß
	TCP8927-53-1100 (Hosiden) oder äquivalenter Anschluß

9. WARTUNG UND KUNDENDIENST

Informationen über Wartung und Kundendienst erhalten Sie bei Ihrem CBM-Händler oder unter den folgenden Anschriften.

Nordamerika
CBM America Corporation
Service Center
363 Van Ness Way
Suite 404
Torrance, CA 90501, U.S.A

Tel: +1-310-781-1460
Fax: +1-310-781-9157
E-mail: sales@cbma.com
http://www.cbma.com/

Sonstige Länder
Japan CBM Corporation
Information Systems Division
CBM Bldg., 5-68-10, Nakano
Nakano-ku, Tokyo 164-0001
Japan

Tel: +81-3-5345-7540
Fax: +81-3-5345-7541
E-mail: info-sys@jcbm.co.jp
http://www.jcbm.co.jp/

Japan CBM Corporation

Information Systems Division
Head Office

CBM Bldg., 5-68-10, Nakano, Nakano-ku, Tokyo 164-0001, Japan
Tel: (+81-3) 5345-7540 Fax: (+81-3) 5345-7541

11-000126-××××-××××-×××.× Printed in Japan